NX-series Temperature Input Unit / Heater Burnout Detection Unit

NX-TS/HB

CSM_NX-TS_HB_DS_E_3_4

NX Units to meet every temperature control need

- Temperature Input Unit (NX-TS)
  Standard and high-speed, high-precision temperature measurement and control
- Heater Burnout Detection Unit (NX-HB)
  Temperature control with heater burnout detection in conjunction with a temperature input unit and PID instructions

NX-TS2101 NX-TS3101 NX-TS2201 NX-TS3201

NX-HB3101

General Specifications

Item		Specification
Enclosure		Mounted in a panel
Grounding method		Ground to 100 Ω or less
Operating environment	Ambient operating temperature	0 to 55°C
	Ambient operating humidity	10% to 95% (with no condensation or icing)
	Atmosphere	Must be free from corrosive gases.
	Ambient storage temperature	–25 to 70°C (with no condensation or icing)
	Altitude	2,000 m max.
	Pollution degree	2 or less: Conforms to JIS B3502 and IEC 61131-2.
	Noise immunity	2 kV on power supply line (Conforms to IEC61000-4-4.)
	Overvoltage category	Category II: Conforms to JIS B3502 and IEC 61131-2.
	EMC immunity level	Zone B
	Vibration resistance	Conforms to IEC 60068-2-6. 5 to 8.4 Hz with 3.5-mm amplitude, 8.4 to 150 Hz, acceleration of 9.8 m/s^2, 100 min each in X, Y, and Z directions (10 sweeps of 10 min each = 100 min total)
	Shock resistance	Conforms to IEC 60068-2-27. 147 m/s^2, 3 times each in X, Y, and Z directions
Applicable standards *		cULus: Listed (UL508), ANSI/ISA 12.12.01, EU: EN 61131-2, C-Tick or RCM, KC Registration, NK, LR

* Refer to the OMRON website (www.ia.omron.com) or ask your OMRON representative for the most recent applicable standards for each model.

Sysmac is a trademark or registered trademark of OMRON Corporation in Japan and other countries for OMRON factory automation products.
EtherCAT® is a registered trademark and patented technology, licensed by Beckhoff Automation GmbH, Germany.
EtherNet/IP™ is a trademark of ODVA.
Other company names and product names in this document are the trademarks or registered trademarks of their respective companies.

System Configurations

Connected to a CPU Unit

The following figure shows a system configuration when NX Units are connected to an NX-series CPU Unit.

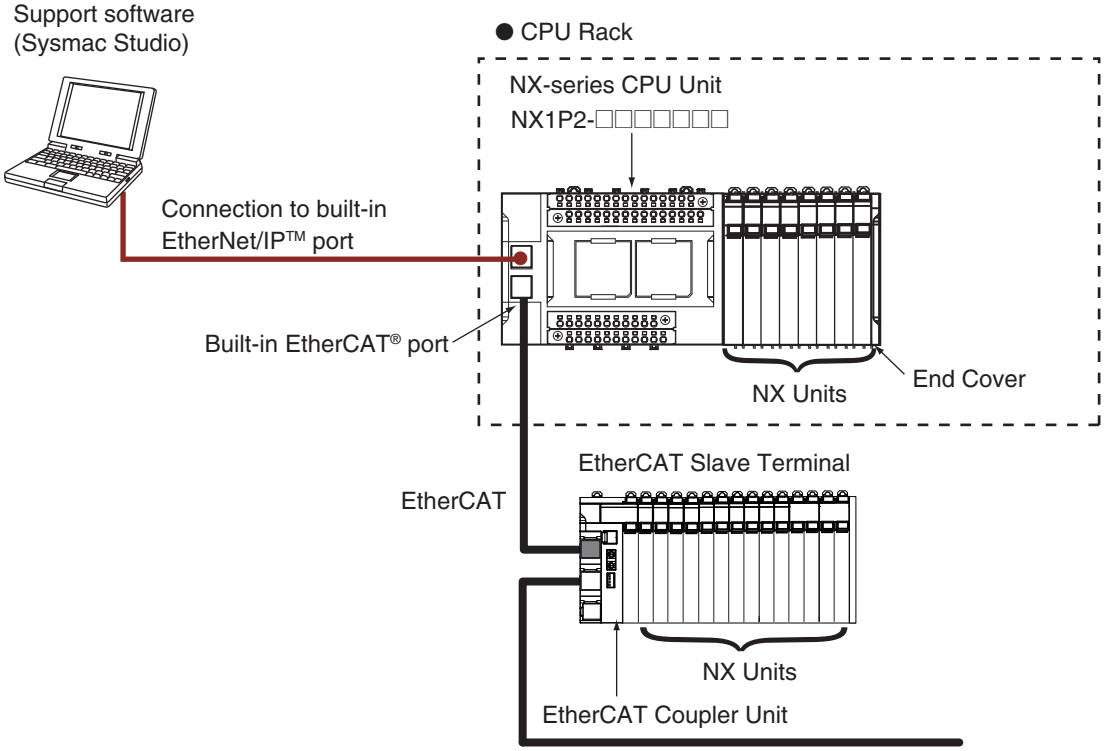

Note: For whether an NX Unit can be connected to the CPU Unit, refer to the version information.

Connected to an EtherCAT Coupler Unit

The following figure shows an example of the system configuration when an EtherCAT Coupler Unit is used as a Communications Coupler Unit.

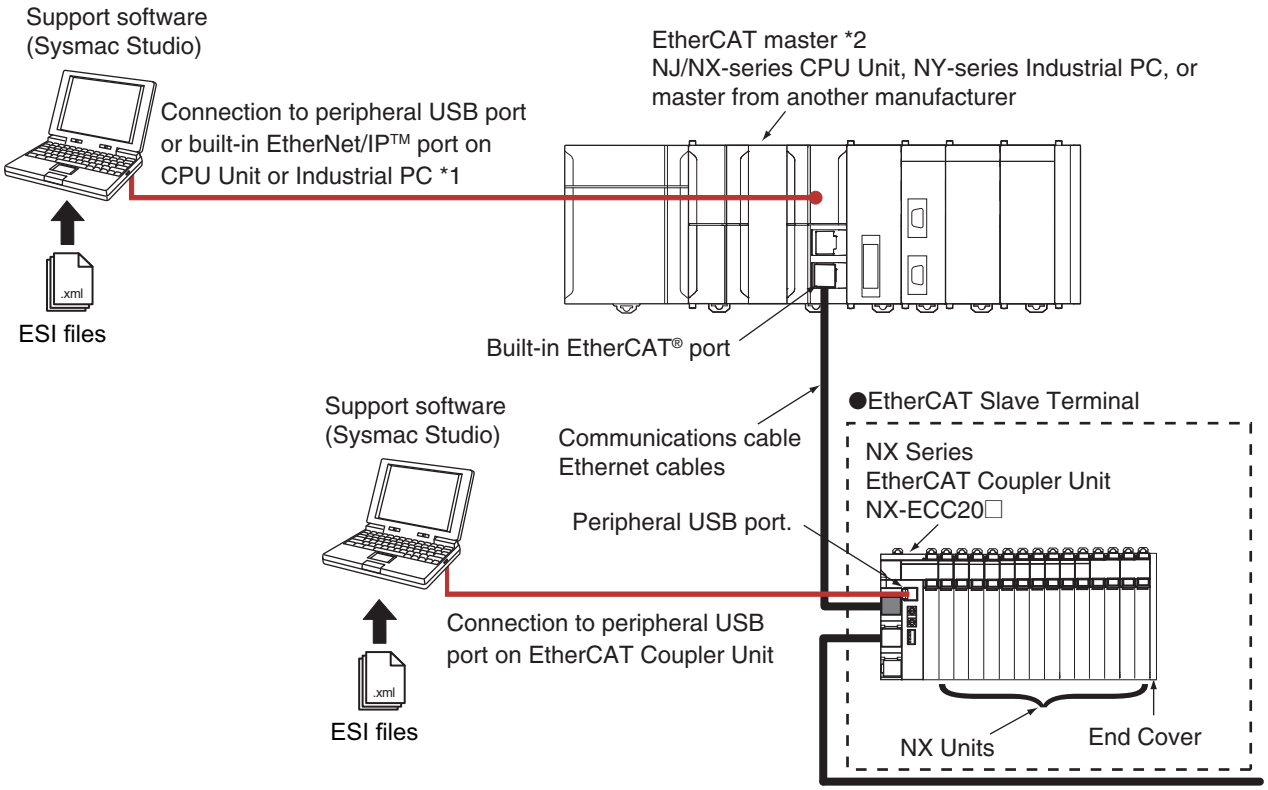

*1. The connection method for the Sysmac Studio depends on the model of the CPU Unit or Industrial PC.
*2. An EtherCAT Slave Terminal cannot be connected to any of the OMRON CJ1W-NC□81/□82 Position Control Units even though they can operate as EtherCAT masters.

Note: For whether an NX Unit can be connected to the Communications Coupler Unit, refer to the version information.

System Configuration in the Case of a Communication Control Unit

The following figure shows a system configuration when a group of NX Units is connected to an NX-series Communication Control Unit. To configure a Safety Network Controller, mount the Safety CPU Unit, which is one of the NX Units, to the CPU Rack of the Communication Control Unit.
You cannot connect a Communication Control Unit with Heater Burnout Detection Unit.

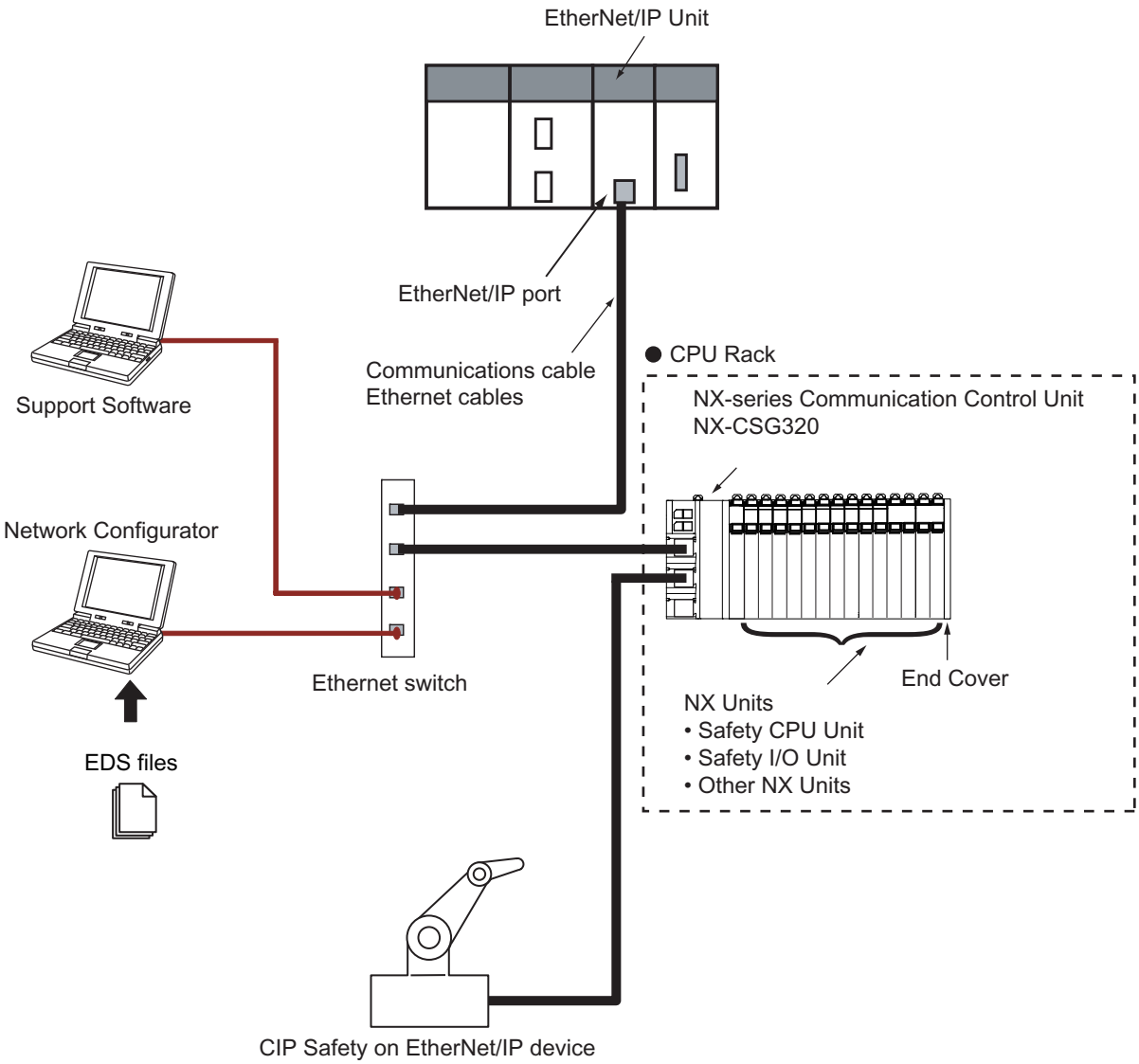

Note: For whether an NX Unit can be connected to the Communication Control Unit, refer to the version information.

Model Number Structure

NX-□□□□□□
(1) (2) (3) (4)

(1) Unit type

No.	Specification
TS	Temperature input
HB	Heater burnout detection

(2) Number of points

No.	Specification
2	2 points
3	4 points
4	8 points

(3) I/O type

- Temperature Input Units

No.	Sensor type
1	Thermocouple
2	Resistance thermometer

- Heater Burnout Detection Units

No.	Internal I/O common processing of control outputs
1	NPN
2	PNP

(4) Other specifications

- Temperature Input Units

No.	Conversion time	Resolution	I/O refreshing method	
			Free-Run refreshing only *1	Switching Synchronous I/O refreshing *2 and Free-Run refreshing
01	250 ms/Unit	0.1°C max. *3	Yes	---
02	10 ms/Unit	0.01°C max.	Yes	---
04	60 ms/Unit	0.001°C max.	Yes	---

*1. Free-Run refreshing
*2. Synchronous I/O refreshing
*3. The resolution is 0.2°C max. when the input type is R, S, or W.

- Heater Burnout Detection Units

No.
01

Ordering Information

Applicable standards

Refer to the OMRON website (www.ia.omron.com) or ask your OMRON representative for the most recent applicable standards for each model.

Temperature Input Units

Product name	Specification							Model
	Number of points	Input type	Resolution(25°C)	Over all accuracy (25°C)	Conversion time	I/O refreshing method	Terminals	
Thermocouple Input type	2 points	Thermocouple	0.1°C max. *1	Refer to the *Reference accuracy and temperature coefficient according to the input type and measurement temperature.*	250 ms/ Unit	Free-Run refreshing	16 Terminals	**NX-TS2101**
	4 points						16 Terminals x 2	**NX-TS3101**
	2 points		0.01°C max.		10 ms/Unit		16 Terminals	**NX-TS2102**
	4 points						16 Terminals x 2	**NX-TS3102**
	2 points		0.001°C max.		60 ms/Unit		16 Terminals	**NX-TS2104**
	4 points						16 Terminals x 2	**NX-TS3104**
Resistance Thermometer Input type	2 points	Resistance Thermometer (Pt100/Pt1000, three-wire) *2	0.1°C max.		250 ms/ Unit		16 Terminals	**NX-TS2201**
	4 points						16 Terminals x 2	**NX-TS3201**
	2 points		0.01°C max.		10 ms/Unit		16 Terminals	**NX-TS2202**
	4 points						16 Terminals x 2	**NX-TS3202**
	2 points		0.001°C max.		60 ms/Unit		16 Terminals	**NX-TS2204**
	4 points						16 Terminals x 2	**NX-TS3204**

*1. The resolution is 0.2°C max. when the input type is R, S, or W.
*2. The NX-TS2202 and NX-TS3202 only support Pt100 three-wire sensor.

Heater Burnout Detection Units

Product name	Specification							Model
	CT input section		Control output section					
	Number of inputs	Maximum heater current	Number of outputs	Internal I/O common	Maximum load current	Rated voltage	I/O refreshing method	
Heater Burnout Detection Unit	4	50 A AC	4	NPN	0.1 A/point, 0.4 A/Unit	12 to 24 VDC	Free-Run refreshing	**NX-HB3101**
				PNP		24 VDC		**NX-HB3201**

Optional Products

Product name	Specification	Model
Unit/Terminal Block Coding Pins	Pins for 10 Units (30 terminal block pins and 30 Unit pins)	**NX-AUX02**

Product name	Specification				Model
	No. of terminals	Terminal number indications	Ground terminal mark	Terminal current capacity	
Terminal Block	16	A/B	Not provided	10 A	**NX-TBA162**

Product name	Specification	Model
Current Transformer (CT)*	Hole diameter: 5.8 mm	**E54-CT1**
	Hole diameter: 12.0 mm	**E54-CT3**

* Can be connected to the NX-HB Heater Burnout Detection Unit.

Accessories

Not included.

Version Information

Connected to a CPU Unit

Refer to the user's manual for the CPU Unit details on the CPU Units to which NX Units can be connected.

Temperature Input Units

NX Unit		Corresponding unit versions/versions	
Model	Unit version	CPU Unit	Sysmac Studio
NX-TS2101	Ver.1.0	Ver.1.13	Ver.1.17
	Ver.1.1		
NX-TS2102	Ver.1.1		
NX-TS2104	Ver.1.1		
NX-TS2201	Ver.1.0		
	Ver.1.1		
NX-TS2202	Ver.1.1		
NX-TS2204	Ver.1.1		
NX-TS3101	Ver.1.0		
	Ver.1.1		
NX-TS3102	Ver.1.1		
NX-TS3104	Ver.1.1		
NX-TS3201	Ver.1.0		
	Ver.1.1		
NX-TS3202	Ver.1.1		
NX-TS3204	Ver.1.1		

Heater Burnout Detection Units

NX Unit		Corresponding unit versions/versions	
Model	Unit version	CPU Unit	Sysmac Studio
NX-HB3101	Ver.1.0	Ver.1.13	Ver.1.17
NX-HB3201			

Note: Some Units do not have all of the versions given in the above table. If a Unit does not have the specified version, support is provided by the oldest available version after the specified version. Refer to the user's manuals for the specific Units for the relation between models and versions.

Connected to an EtherCAT Coupler Unit

Temperature Input Units

NX Unit		Corresponding unit versions/versions		
Model	Unit Version	EtherCAT Coupler Unit	CPU Unit or Industrial PC	Sysmac Studio
NX-TS2101	Ver.1.0	Ver.1.0	Ver.1.05	Ver.1.06
	Ver.1.1			Ver.1.08
NX-TS2102	Ver.1.1			
NX-TS2104	Ver.1.1			
NX-TS2201	Ver.1.0			Ver.1.06
	Ver.1.1			Ver.1.08
NX-TS2202	Ver.1.1			
NX-TS2204	Ver.1.1			
NX-TS3101	Ver.1.0			Ver.1.06
	Ver.1.1			Ver.1.08
NX-TS3102	Ver.1.1			
NX-TS3104	Ver.1.1			
NX-TS3201	Ver.1.0			Ver.1.06
	Ver.1.1			Ver.1.08
NX-TS3202	Ver.1.1			
NX-TS3204	Ver.1.1			

Heater Burnout Detection Units

NX Unit		Corresponding unit versions/versions		
Model	Unit version	EtherCAT Coupler Unit	CPU Unit or Industrial PC	Sysmac Studio
NX-HB3101	Ver.1.0	Ver.1.0	Ver.1.05	Ver.1.16
NX-HB3201				

Note: Some Units do not have all of the versions given in the above table. If a Unit does not have the specified version, support is provided by the oldest available version after the specified version. Refer to the user's manuals for the specific Units for the relation between models and versions.

Connected to an EtherNet/IP Coupler Unit

Temperature Input Units

NX Unit		Corresponding unit versions/versions					
Model	Unit version	Application with an NJ/NX/NY-series Controller *1			Application with a CS/CJ/CP-series PLC *2		
		EtherNet/IP Coupler Unit	CPU Unit or Industrial PC	Sysmac Studio	EtherNet/IP Coupler Unit	Sysmac Studio	NX-IO Configurator *3
NX-TS2101	Ver.1.0	Ver.1.2	Ver.1.14	Ver.1.19	Ver.1.0	Ver.1.10	Ver.1.00
	Ver.1.1						
NX-TS2102	Ver.1.1						
NX-TS2104	Ver.1.1						
NX-TS2201	Ver.1.0						
	Ver.1.1						
NX-TS2202	Ver.1.1						
NX-TS2204	Ver.1.1						
NX-TS3101	Ver.1.0						
	Ver.1.1						
NX-TS3102	Ver.1.1						
NX-TS3104	Ver.1.1						
NX-TS3201	Ver.1.0						
	Ver.1.1						
NX-TS3202	Ver.1.1						
NX-TS3204	Ver.1.1						

Heater Burnout Detection Units

NX Unit		Corresponding unit versions/versions					
Model	Unit version	Application with an NJ/NX/NY-series Controller *1			Application with a CS/CJ/CP-series PLC *2		
		EtherNet/IP Coupler Unit	CPU Unit or Industrial PC	Sysmac Studio	EtherNet/IP Coupler Unit	Sysmac Studio	NX-IO Configurator *3
NX-HB3101	Ver.1.0	Ver.1.2	Ver.1.14	Ver.1.19	Ver.1.0	Ver.1.16	Ver.1.00
NX-HB3201							

Note: Some Units do not have all of the versions given in the above table. If a Unit does not have the specified version, support is provided by the oldest available version after the specified version. Refer to the user's manuals for the specific Units for the relation between models and versions.

*1. Refer to the user's manual of the EtherNet/IP Coupler Unit for the unit versions of EtherNet/IP Units corresponding to EtherNet/IP Coupler Units.

*2. Refer to the user's manual of the EtherNet/IP Coupler Unit for the unit versions of CPU Units and EtherNet/IP Units corresponding to EtherNet/IP Coupler Units.

*3. For connection to an EtherNet/IP Coupler Unit with unit version 1.0, connection is supported only for a connection to the peripheral USB port on the EtherNet/IP Coupler Unit. You cannot connect by any other path. If you need to connect by another path, use an EtherNet/IP Coupler Unit with unit version 1.2 or later.

Connected to an Communication Control Unit

Temperature Input Units

NX Unit		Corresponding unit versions/versions	
Model	Unit version	Communication Control Unit	Sysmac Studio
NX-TS2101	Ver.1.0	Ver.1.00	Ver.1.24
	Ver.1.1		
NX-TS2102	Ver.1.1		
NX-TS2104	Ver.1.1		
NX-TS2201	Ver.1.0		
	Ver.1.1		
NX-TS2202	Ver.1.1		
NX-TS2204	Ver.1.1		
NX-TS3101	Ver.1.0	Ver.1.00	Ver.1.24
	Ver.1.1		
NX-TS3102	Ver.1.1		
NX-TS3104	Ver.1.1		
NX-TS3201	Ver.1.0		
	Ver.1.1		
NX-TS3202	Ver.1.1		
NX-TS3204	Ver.1.1		

Heater Burnout Detection Units

NX Unit		Corresponding unit versions/versions	
Model	Unit version	Communication Control Unit	Sysmac Studio
NX-HB3101	Ver.1.0	---	---
NX-HB3201			

Note: 1. Some Units do not have all of the versions given in the above table. If a Unit does not have the specified version, support is provided by the oldest available version after the specified version. Refer to the user's manuals for the specific Units for the relation between models and versions.

2. You cannot connect the relevant NX Unit to the Communication Control Unit if "---" is shown in the corresponding unit versions/versions column.

External Interface

Screwless Clamping Terminal Block Type

Temperature Input Unit (Resistance Thermometer Input type)/Heater Burnout Detection Unit

12mm Width

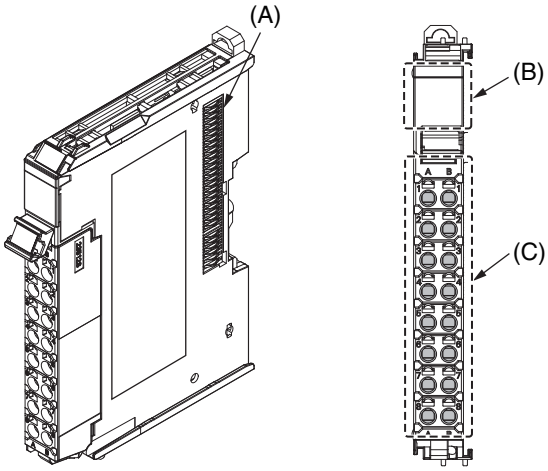

24mm Width

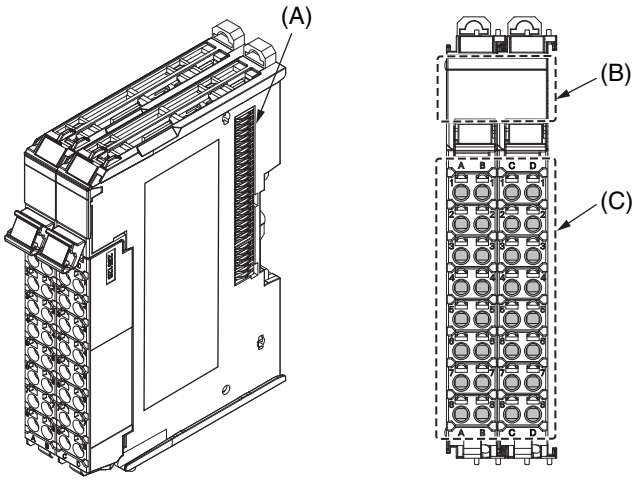

Letter	Item	Specification
(A)	NX bus connector	This connector is used to connect to another Unit.
(B)	Indicators	The indicators show the current operating status of the Unit.
(C)	Terminal block	The terminal block is used to connect to external devices. The number of terminals depends on the Unit.

Temperature Input Unit (Thermocouple Input type)

12mm Width

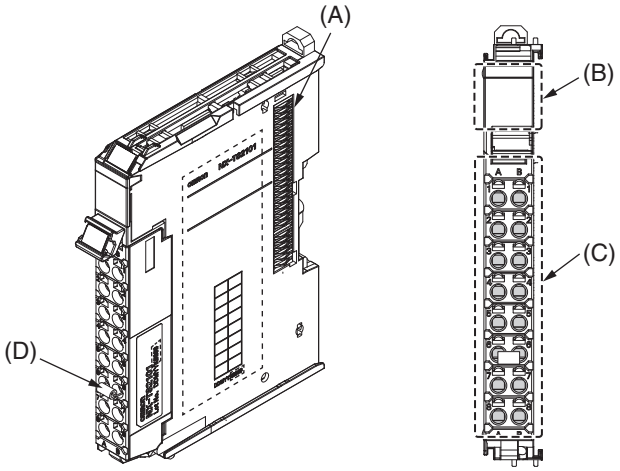

24mm Width

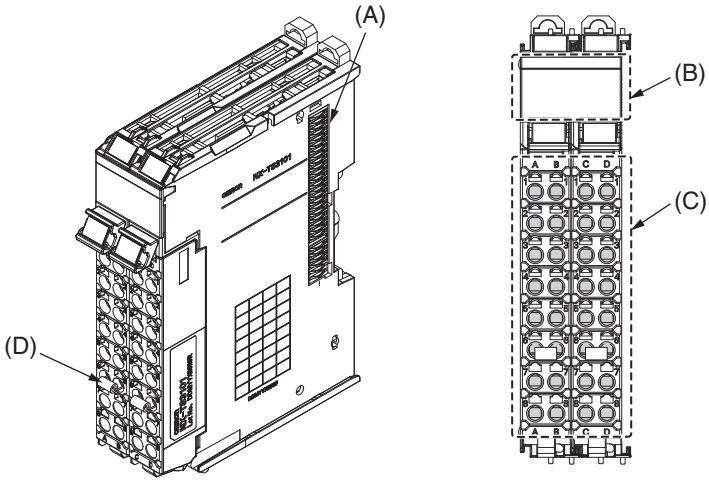

Letter	Item	Specification
(A)	NX bus connector	This connector is used to connect to another Unit.
(B)	Indicators	The indicators show the current operating status of the Unit.
(C)	Terminal block	The terminal block is used to connect to external devices. The number of terminals depends on the Unit.
(D)	Cold junction sensor	This sensor is used to compensate the cold junction. The sensors are mounted on both left and right terminal blocks for models with 24 mm width.

Terminal Blocks

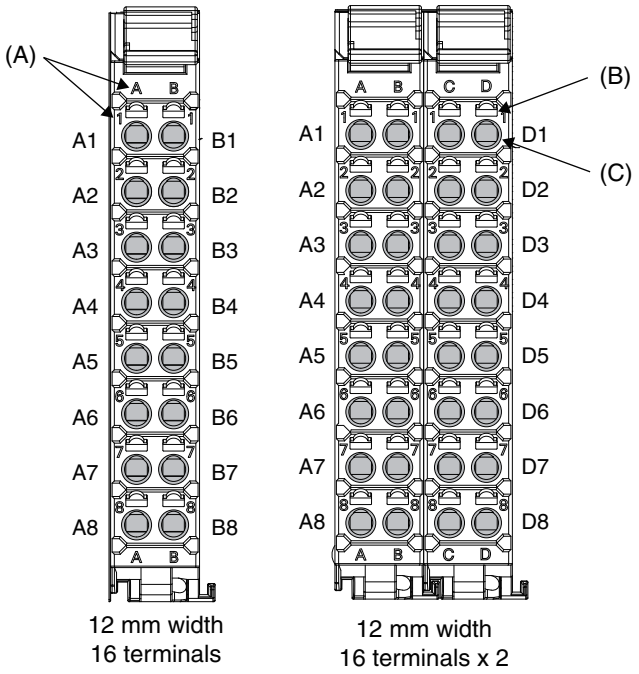

Letter	Item	Specification
(A)	Terminal number indications	The terminal number is identified by a column (A through D) and a row (1 through 8). Therefore, terminal numbers are written as a combination of columns and rows, A1 through A8 and B1 through B8. For a 24-mm-wide terminal block (16 terminals x 2), the left side contains terminals A1 through A8 and B1 through B8. The right side contains terminals C1 through C8 and D1 through D8. The terminal number indication is the same regardless of the number of terminals on the terminal block.
(B)	Release holes	A flat-blade screwdriver is inserted here to attach and remove the wiring.
(C)	Terminal holes	The wires are inserted into these holes.

Applicable Terminal Blocks for Each Unit Model

Unit model	Terminal Blocks				
	Model	No. of terminals	Terminal number indications	Ground terminal mark	Terminal current capacity
NX-TS2□□□	NX-TBA162	16	A/B	None	10 A
NX-TS3□□□	NX-TBA162	16	A/B	None	10 A
	NX-TBB162		C/D		
NX-HB3□01	NX-TBA162	16	A/B	Not provided	10A

Applicable Wires

Using Ferrules

If you use ferrules, attach the twisted wires to them.
Observe the application instructions for your ferrules for the wire stripping length when attaching ferrules.
Always use plated one-pin ferrules. Do not use unplated ferrules or two-pin ferrules.

The applicable ferrules, wires, and crimping tool are given in the following table.

Terminal type	Manufacturer	Ferrule model	Applicable wire (mm^2 (AWG))	Crimping tool
Terminals other than ground terminals	Phoenix Contact	AI0,34-8	0.34 (#22)	Phoenix Contact (The figure in parentheses is the applicable wire size.) CRIMPFOX 6 (0.25 to 6 mm^2, AWG24 to 10)
		AI0,5-8	0.5 (#20)	
		AI0,5-10		
		AI0,75-8	0.75 (#18)	
		AI0,75-10		
		AI1,0-8	1.0 (#18)	
		AI1,0-10		
		AI1,5-8	1.5 (#16)	
		AI1,5-10		
Ground terminals		AI2,5-10	2.0 *	
Terminals other than ground terminals	Weidmuller	H0.14/12	0.14 (#26)	Weidmuller (The figure in parentheses is the applicable wire size.) PZ6 Roto (0.14 to 6 mm^2, AWG 26 to 10)
		H0.25/12	0.25 (#24)	
		H0.34/12	0.34 (#22)	
		H0.5/14	0.5 (#20)	
		H0.5/16		
		H0.75/14	0.75 (#18)	
		H0.75/16		
		H1.0/14	1.0 (#18)	
		H1.0/16		
		H1.5/14	1.5 (#16)	
		H1.5/16		

* Some AWG 14 wires exceed 2.0 mm^2 and cannot be used in the screwless clamping terminal block.

When you use any ferrules other than those in the above table, crimp them to the twisted wires so that the following processed dimensions are achieved.

Finished Dimensions of Ferrules

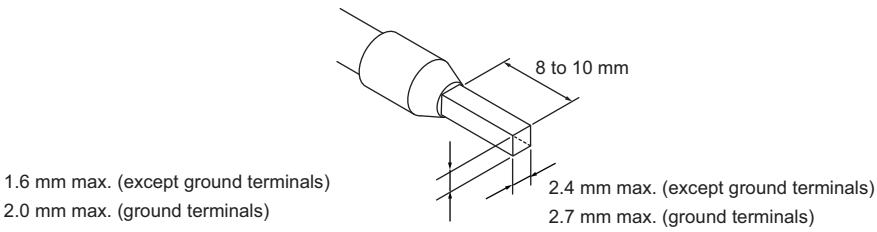

Using Twisted Wires/Solid Wires

If you use the twisted wires or the solid wires, use the following table to determine the correct wire specifications.

Terminals		Wire type				Wire size	Conductor length (stripping length)
		Twisted wires		Solid wire			
Classification	Current capacity	Plated	Unplated	Plated	Unplated		
All terminals except ground terminals	2 A or less	Possible	Possible	Possible	Possible	0.08 to 1.5 mm^2 AWG28 to 16	8 to 10 mm
	Greater than 2 A and 4 A or less		Not Possible	Possible *1	Not Possible		
	Greater than 4 A	Possible *1		Not Possible			
Ground terminals	---	Possible	Possible	Possible *2	Possible *2	2.0 mm^2	9 to 10 mm

*1. Secure wires to the screwless clamping terminal block. Refer to the Securing Wires in the USER'S MANUAL for how to secure wires.
*2. With the NX-TB□□□1 Terminal Block, use twisted wires to connect the ground terminal. Do not use a solid wire.

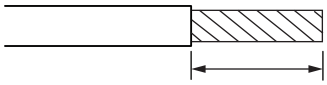

Conductor length (stripping length)

<Additional Information> If more than 2 A will flow on the wires, use plated wires or use ferrules.

Dimensions

(Unit/mm)

Screwless Clamping Terminal Block Type

12 mm Width

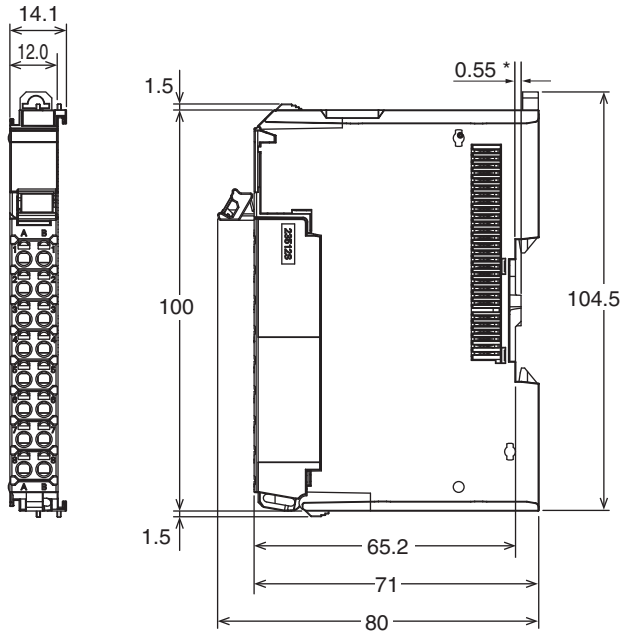

24 mm Width

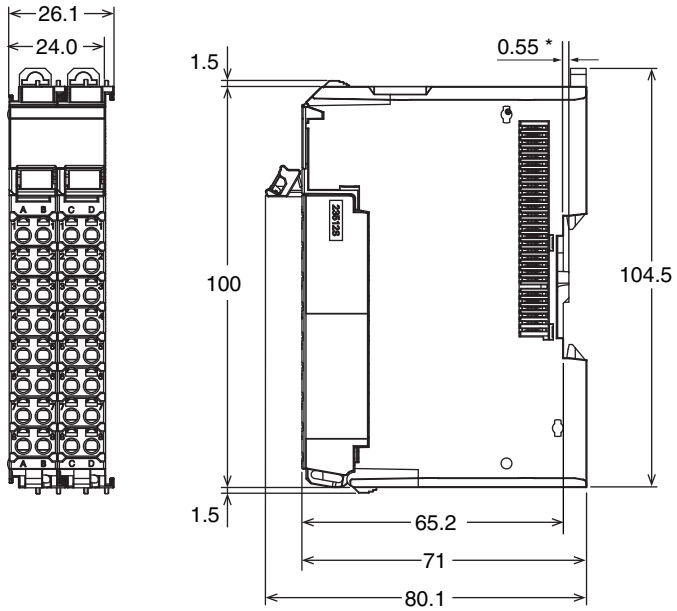

* The dimension is 1.35 mm for Units with lot numbers through December 2014.

Related Manual

Cat. No.	Model number	Manual name	Application	Description
W566	NX-TS□□□□ NX-HB□□□□	NX-series Analog I/O Units User's Manual for Temperature Input Units and Heater Burnout Detection Units	Learning how to use NX-series Temperature Input Units and Heater Burnout Detection Units	The hardware, setup methods, and functions of the NX-series Temperature Input Units and Heater Burnout Detection Units are described.

NX-series Temperature Input Unit

NX-TS

Standard and high-speed, high-precision temperature measurement and control

- Temperature Input Units for the NX-series modular I/O system
- Connect to other NX I/O Units and EtherCAT Coupler Units using the high-speed NX-bus
- Thermocouple and platinum resistance thermometer input models are available

Features

- Up to four temperature sensor inputs per unit
- Three sampling speeds, 250 ms, 60 ms, and 10 ms, are available to cover a wide range from general-purpose application to high-speed, high-precision control
- Moving average, input sensor disconnection detection, cold junction compensation enable/disable setting, and input correction
- Detachable front connector with screwless Push-In Plus terminals for easy installation and maintenance
- Connect to the CJ PLC using the EtherNet/IP™ bus coupler

Temperature Input Unit Specifications

Temperature Input Unit (Thermocouple Input type) 2 points NX-TS2101

Unit name	Temperature Input Unit (thermocouple input type)	**Model**	NX-TS2101
Number of points	2 points	**External connection terminals**	Screwless clamping terminal block (16 terminals)
I/O refreshing method	Free-Run refreshing		
Indicators	TS indicator 	**Temperature sensor**	K, J, T, E, L, U, N, R, S, B, WRe5-26, PLII
		Input conversion range	±20°C of the input range
		Absolute maximum rating	±130 mV
		Input impedance	20 kΩ min.
		Resolution	0.1°C max. *1
		Reference accuracy	*2
		Temperature coefficient	*2
		Cold junction compensation error	±1.2°C *3 *4
		Input disconnection detection current	Approx. 0.1 μA
Warm-up period	30 minutes	**Conversion time**	250 ms/Unit
Dimensions	12 (W) x 100 (H) x 71 (D)	**Isolation method**	Between the input and the NX bus: Power = Transformer, Signal = Photocoupler Between inputs: Power = Transformer, Signal = Photocoupler
Insulation resistance	20 MΩ min. between isolated circuits (at 100 VDC)	**Dielectric strength**	510 VAC between isolated circuits for 1 minute at a leakage current of 5 mA max.
I/O power supply method	No supply	**Current capacity of I/O power supply terminal**	Without I/O power supply terminals
NX Unit power consumption	• Connected to a CPU Unit or Communication Control Unit 1.25 W max. • Connected to a Communications Coupler Unit 0.90 W max.	**Current consumption from I/O power supply**	No consumption
Weight	70 g max.		
Installation orientation and restrictions	Installation orientation: • Connected to a CPU Unit or Communication Control Unit: Possible in upright installation. • Connected to a Communications Coupler Unit: Possible in 6 orientations. Restrictions: The cold junction compensation error is restricted according to the installation orientation and the power consumption of adjacent Units. Refer to *Cold Junction Compensation Error Specifications for Units That Take a Thermocouple Input Type*.		
Terminal connection diagram	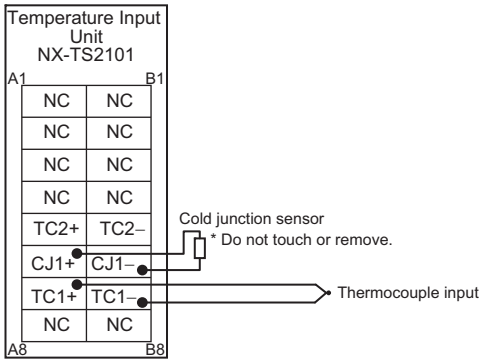 		

*1. The resolution is 0.2°C max. when the input type is R, S, or W.
*2. Refer to *Reference Accuracy and Temperature Coefficient According to the Input Type and Measurement Temperature*.
*3. The overall accuracy is guaranteed for a set consisting of a cold junction sensor that is mounted on the terminal block and a Temperature Input Unit. Be sure to use the terminal block and the Temperature Input Unit together. A calibration control number is both displayed on the terminal block and the Unit. Make sure to return the terminal block (including a cold junction sensor mounted) and the Unit together for repair.
*4. Refer to *Cold Junction Compensation Error Specifications for Units That Take a Thermocouple Input Type* for the specifications for each set of operating conditions.

Temperature Input Unit (Thermocouple Input type) 2 points NX-TS2102

Unit name	Temperature Input Unit (thermocouple input type)	**Model**	NX-TS2102
Number of points	2 points	**External connection terminals**	Screwless clamping terminal block (16 terminals)
I/O refreshing method	Free-Run refreshing		
Indicators	TS indicator 	**Temperature sensor**	K, J, T, E, L, U, N, R, S, WRe5-26, PLII
		Input conversion range	±20°C of the input range
		Absolute maximum rating	±130 mV
		Input impedance	20 kΩ min.
		Resolution	0.01°C max.
		Reference accuracy	*1
		Temperature coefficient	*1
		Cold junction compensation error	±1.2°C *2 *3
		Input disconnection detection current	Approx. 0.1 μA
Warm-up period	45 minutes	**Conversion time**	10 ms/Unit
Dimensions	12 (W) x 100 (H) x 71 (D)	**Isolation method**	Between the input and the NX bus: Power = Transformer, Signal = Digital isolator Between inputs: Power = Transformer, Signal = Digital isolator
Insulation resistance	20 MΩ min. between isolated circuits (at 100 VDC)	**Dielectric strength**	510 VAC between isolated circuits for 1 minute at a leakage current of 5 mA max.
I/O power supply method	No supply	**Current capacity of I/O power supply terminal**	Without I/O power supply terminals
NX Unit power consumption	• Connected to a CPU Unit or Communication Control Unit 1.15 W max. • Connected to a Communications Coupler Unit 0.80 W max.	**Current consumption from I/O power supply**	No consumption
Weight	70 g max.		
Installation orientation and restrictions	Installation orientation: • Connected to a CPU Unit or Communication Control Unit: Possible in upright installation. • Connected to a Communications Coupler Unit: Possible in 6 orientations. Restrictions: The cold junction compensation error is restricted according to the installation orientation and the power consumption of adjacent Units. Refer to *Cold Junction Compensation Error Specifications for Units That Take a Thermocouple Input Type*.		
Terminal connection diagram	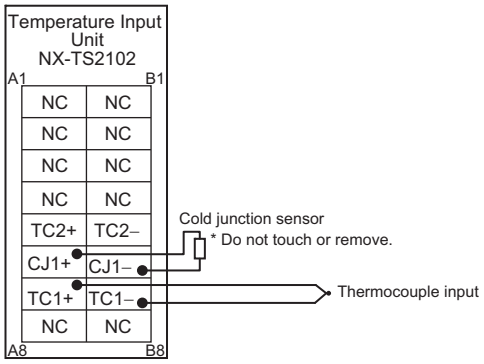 		

*1. Refer to *Reference Accuracy and Temperature Coefficient According to the Input Type and Measurement Temperature*.
*2. The overall accuracy is guaranteed for a set consisting of a cold junction sensor that is mounted on the terminal block and a Temperature Input Unit. Be sure to use the terminal block and the Temperature Input Unit together. A calibration control number is both displayed on the terminal block and the Unit. Make sure to return the terminal block (including a cold junction sensor mounted) and the Unit together for repair.
*3. Refer to *Cold Junction Compensation Error Specifications for Units That Take a Thermocouple Input Type* for the specifications for each set of operating conditions.

Temperature Input Unit (Thermocouple Input type) 2 points NX-TS2104

Unit name	Temperature Input Unit (thermocouple input type)	**Model**	NX-TS2104
Number of points	2 points	**External connection terminals**	Screwless clamping terminal block (16 terminals)
I/O refreshing method	Free-Run refreshing		
Indicators	TS indicator 	**Temperature sensor**	K, J, T, E, L, U, N, R, S, WRe5-26, PLII
		Input conversion range	±20°C of the input range
		Absolute maximum rating	±130 mV
		Input impedance	20 kΩ min.
		Resolution	0.001°C max.
		Reference accuracy	*1
		Temperature coefficient	*1
		Cold junction compensation error	±1.2°C *2 *3
		Input disconnection detection current	Approx. 0.1 μA
Warm-up period	45 minutes	**Conversion time**	60 ms/Unit
Dimensions	12 (W) x 100 (H) x 71 (D)	**Isolation method**	Between the input and the NX bus: Power = Transformer, Signal = Digital isolator Between inputs: Power = Transformer, Signal = Digital isolator
Insulation resistance	20 MΩ min. between isolated circuits (at 100 VDC)	**Dielectric strength**	510 VAC between isolated circuits for 1 minute at a leakage current of 5 mA max.
I/O power supply method	No supply	**Current capacity of I/O power supply terminal**	Without I/O power supply terminals
NX Unit power consumption	• Connected to a CPU Unit or Communication Control Unit 0.95 W max. • Connected to a Communications Coupler Unit 0.80 W max.	**Current consumption from I/O power supply**	No consumption
Weight	70 g max.		
Installation orientation and restrictions	Installation orientation: • Connected to a CPU Unit or Communication Control Unit: Possible in upright installation. • Connected to a Communications Coupler Unit: Possible in 6 orientations. Restrictions: The cold junction compensation error is restricted according to the installation orientation and the power consumption of adjacent Units. Refer to *Cold Junction Compensation Error Specifications for Units That Take a Thermocouple Input Type*.		
Terminal connection diagram	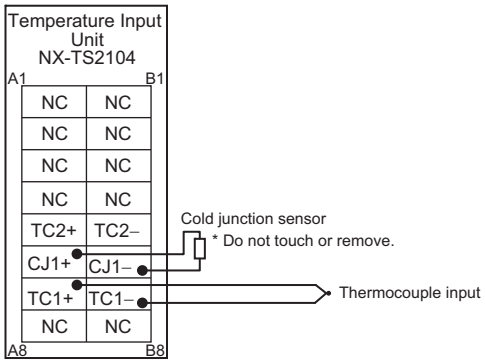 		

*1. Refer to *Reference Accuracy and Temperature Coefficient According to the Input Type and Measurement Temperature*.
*2. The overall accuracy is guaranteed for a set consisting of a cold junction sensor that is mounted on the terminal block and a Temperature Input Unit. Be sure to use the terminal block and the Temperature Input Unit together. A calibration control number is both displayed on the terminal block and the Unit. Make sure to return the terminal block (including a cold junction sensor mounted) and the Unit together for repair.
*3. Refer to *Cold Junction Compensation Error Specifications for Units That Take a Thermocouple Input Type* for the specifications for each set of operating conditions.

Temperature Input Unit (Resistance Thermometer Input type) 2 points NX-TS2201

Unit name	Temperature Input Unit (resistance thermometer input type)	**Model**	NX-TS2201
Number of points	2 points	**External connection terminals**	Screwless clamping terminal block (16 terminals)
I/O refreshing method	Free-Run refreshing		
Indicator	TS indicator 	**Temperature sensor**	Pt100 (three-wire)/Pt1000 (three-wire)
		Input conversion range	±20°C of the input range
		Input detection current	Approx. 0.25 mA
		Resolution	0.1°C max.
		Reference accuracy	*
		Temperature coefficient	*
		Effect of conductor resistance	0.06°C/Ω max. (also 20 Ω max.)
Warm-up period	10 minutes	**Conversion time**	250 ms/Unit
Dimensions	12 (W) x 100 (H) x 71 (D)	**Isolation method**	Between the input and the NX bus: Power = Transformer, Signal = Photocoupler Between inputs: Power = Transformer, Signal = Photocoupler
Insulation resistance	20 MΩ min. between isolated circuits (at 100 VDC)	**Dielectric strength**	510 VAC between isolated circuits for 1 minute at a leakage current of 5 mA max.
I/O power supply method	No supply	**Current capacity of I/O power supply terminal**	Without I/O power supply terminals
NX Unit power consumption	• Connected to a CPU Unit or Communication Control Unit 1.25 W max. • Connected to a Communications Coupler Unit 0.90 W max.	**Current consumption from I/O power supply**	No consumption
Weight	70 g max.		
Installation orientation and restrictions	Installation orientation: • Connected to a CPU Unit or Communication Control Unit: Possible in upright installation. • Connected to a Communications Coupler Unit: Possible in 6 orientations. Restrictions: No restrictions		
Terminal connection diagram	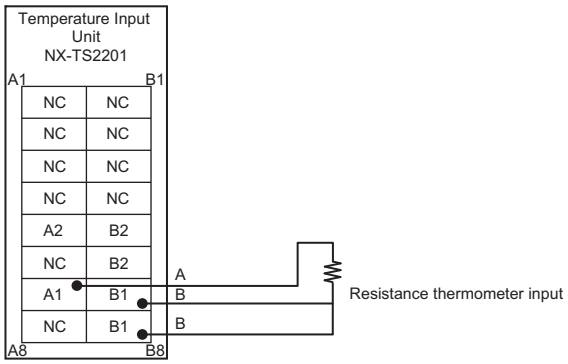 		

* Refer to *Reference Accuracy and Temperature Coefficient According to the Input Type and Measurement Temperature.*

Temperature Input Unit (Resistance Thermometer Input type) 2 points NX-TS2202

Unit name	Temperature Input Unit (resistance thermometer input type)	**Model**	NX-TS2202
Number of points	2 points	**External connection terminals**	Screwless clamping terminal block (16 terminals)
I/O refreshing method	Free-Run refreshing		
Indicator	TS indicator 	**Temperature sensor**	Pt100 (three-wire)
		Input conversion range	±20°C of the input range
		Input detection current	Approx. 0.25 mA
		Resolution	0.01°C max.
		Reference accuracy	*
		Temperature coefficient	*
		Effect of conductor resistance	0.06°C/Ω max. (also 20 Ω max.)
Warm-up period	30 minutes	**Conversion time**	10 ms/Unit
Dimensions	12 (W) x 100 (H) x 71 (D)	**Isolation method**	Between the input and the NX bus: Power = Transformer, Signal = Digital isolator Between inputs: Power = Transformer, Signal = Digital isolator
Insulation resistance	20 MΩ min. between isolated circuits (at 100 VDC)	**Dielectric strength**	510 VAC between isolated circuits for 1 minute at a leakage current of 5 mA max.
I/O power supply method	No supply	**Current capacity of I/O power supply terminal**	Without I/O power supply terminals
NX Unit power consumption	• Connected to a CPU Unit or Communication Control Unit 1.15 W max. • Connected to a Communications Coupler Unit 0.75 W max.	**Current consumption from I/O power supply**	No consumption
Weight	70 g max.		
Installation orientation and restrictions	Installation orientation: • Connected to a CPU Unit or Communication Control Unit: Possible in upright installation. • Connected to a Communications Coupler Unit: Possible in 6 orientations. Restrictions: No restrictions		
Terminal connection diagram	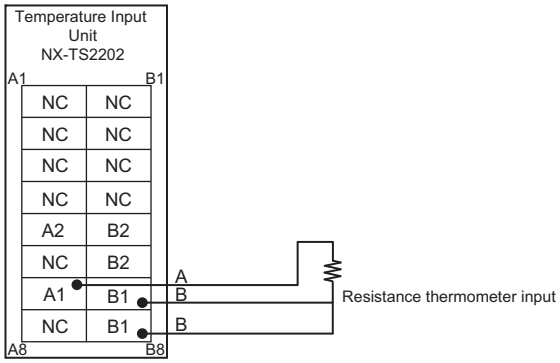 		

* Refer to *Reference Accuracy and Temperature Coefficient According to the Input Type and Measurement Temperature.*

Temperature Input Unit (Resistance Thermometer Input type) 2 points NX-TS2204

Unit name	Temperature Input Unit (resistance thermometer input type)	**Model**	NX-TS2204
Number of points	2 points	**External connection terminals**	Screwless clamping terminal block (16 terminals)
I/O refreshing method	Free-Run refreshing		
Indicator	TS indicator 	**Temperature sensor**	Pt100 (three-wire)/Pt1000 (three-wire)
		Input conversion range	±20°C of the input range
		Input detection current	Approx. 0.25 mA
		Resolution	0.001°C max.
		Reference accuracy	*
		Temperature coefficient	*
		Effect of conductor resistance	0.06°C/Ω max. (also 20 Ω max.)
Warm-up period	30 minutes	**Conversion time**	60 ms/Unit
Dimensions	12 (W) x 100 (H) x 71 (D)	**Isolation method**	Between the input and the NX bus: Power = Transformer, Signal = Digital isolator Between inputs: Power = Transformer, Signal = Digital isolator
Insulation resistance	20 MΩ min. between isolated circuits (at 100 VDC)	**Dielectric strength**	510 VAC between isolated circuits for 1 minute at a leakage current of 5 mA max.
I/O power supply method	No supply	**Current capacity of I/O power supply terminal**	Without I/O power supply terminals
NX Unit power consumption	• Connected to a CPU Unit or Communication Control Unit 0.90 W max. • Connected to a Communications Coupler Unit 0.75 W max.	**Current consumption from I/O power supply**	No consumption
Weight	70 g max.		
Installation orientation and restrictions	Installation orientation: • Connected to a CPU Unit or Communication Control Unit: Possible in upright installation. • Connected to a Communications Coupler Unit: Possible in 6 orientations. Restrictions: No restrictions		
Terminal connection diagram	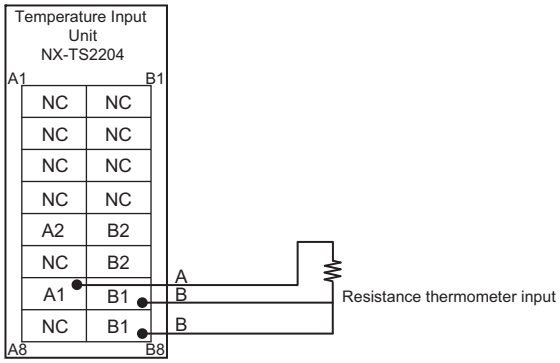 		

* Refer to *Reference Accuracy and Temperature Coefficient According to the Input Type and Measurement Temperature.*

Temperature Input Unit (Thermocouple Input type) 4 points NX-TS3101

Unit name	Temperature Input Unit (thermocouple input type)	**Model**	NX-TS3101
Number of points	4 points	**External connection terminals**	Screwless clamping terminal block (16 terminals x 2)
I/O refreshing method	Free-Run refreshing		
Indicators	TS indicator 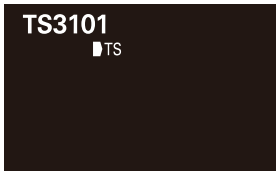 	**Temperature sensor**	K, J, T, E, L, U, N, R, S, B, WRe5-26, PLII
		Input conversion range	±20°C of the input range
		Absolute maximum rating	±130 mV
		Input impedance	20 kΩ min.
		Resolution	0.1°C max. *1
		Reference accuracy	*2
		Temperature coefficient	*2
		Cold junction compensation error	±1.2°C *3 *4
		Input disconnection detection current	Approx. 0.1μA
Warm-up period	30 minutes	**Conversion time**	250 ms/Unit
Dimensions	24 (W) x 100 (H) x 71 (D)	**Isolation method**	Between the input and the NX bus: Power = Transformer, Signal = Photocoupler Between inputs: Power = Transformer, Signal = Photocoupler
Insulation resistance	20 MΩ min. between isolated circuits (at 100 VDC)	**Dielectric strength**	510 VAC between isolated circuits for 1 minute at a leakage current of 5 mA max.
I/O power supply method	No supply	**Current capacity of I/O power supply terminal**	Without I/O power supply terminals
NX Unit power consumption	• Connected to a CPU Unit or Communication Control Unit 1.75 W max. • Connected to a Communications Coupler Unit 1.30 W max.	**Current consumption from I/O power supply**	No consumption
Weight	140 g max.		
Installation orientation and restrictions	Installation orientation: • Connected to a CPU Unit or Communication Control Unit: Possible in upright installation. • Connected to a Communications Coupler Unit: Possible in 6 orientations. Restrictions: The cold junction compensation error is restricted according to the installation orientation and the power consumption of adjacent Units. Refer to *Cold Junction Compensation Error Specifications for Units That Take a Thermocouple Input Type*.		
Terminal connection diagram	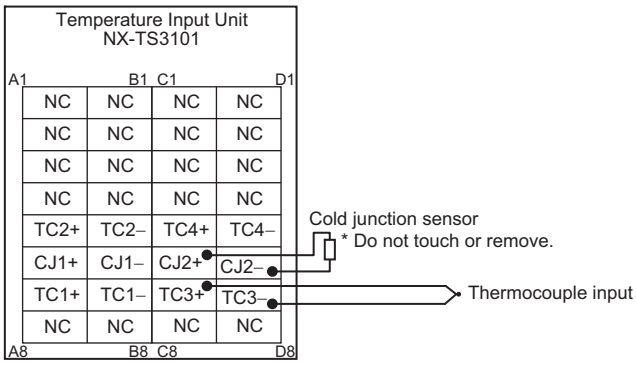 		

*1. The resolution is 0.2°C max. when the input type is R, S, or W.
*2. Refer to *Reference Accuracy and Temperature Coefficient According to the Input Type and Measurement Temperature*.
*3. The overall accuracy is guaranteed for a set consisting of a cold junction sensor that is mounted on the terminal block and a Temperature Input Unit. Be sure to use the terminal block and the Temperature Input Unit together. A calibration control number is both displayed on the terminal block and the Unit. Make sure to return the terminal block (including a cold junction sensor mounted) and the Unit together for repair.
*4. Refer to *Cold Junction Compensation Error Specifications for Units That Take a Thermocouple Input Type* for the specifications for each set of operating conditions.

Temperature Input Unit (Thermocouple Input type) 4 points NX-TS3102

Unit name	Temperature Input Unit (thermocouple input type)	**Model**	NX-TS3102
Number of points	4 points	**External connection terminals**	Screwless clamping terminal block (16 terminals x 2)
I/O refreshing method	Free-Run refreshing		
Indicators	TS indicator 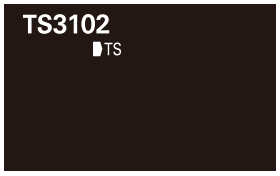 	**Temperature sensor**	K, J, T, E, L, U, N, R, S, WRe5-26, PLII
		Input conversion range	±20°C of the input range
		Absolute maximum rating	±130 mV
		Input impedance	20 kΩ min.
		Resolution	0.01°C max.
		Reference accuracy	*1
		Temperature coefficient	*1
		Cold junction compensation error	±1.2°C *2 *3
		Input disconnection detection current	Approx. 0.1 μA
Warm-up period	45 minutes	**Conversion time**	10 ms/Unit
Dimensions	24 (W) x 100 (H) x 71 (D)	**Isolation method**	Between the input and the NX bus: Power = Transformer, Signal = Digital isolator Between inputs: Power = Transformer, Signal = Digital isolator
Insulation resistance	20 MΩ min. between isolated circuits (at 100 VDC)	**Dielectric strength**	510 VAC between isolated circuits for 1 minute at a leakage current of 5 mA max.
I/O power supply method	No supply	**Current capacity of I/O power supply terminal**	Without I/O power supply terminals
NX Unit power consumption	• Connected to a CPU Unit or Communication Control Unit 1.55 W max. • Connected to a Communications Coupler Unit 1.10 W max.	**Current consumption from I/O power supply**	No consumption
Weight	140 g max.		
Installation orientation and restrictions	Installation orientation: • Connected to a CPU Unit or Communication Control Unit: Possible in upright installation. • Connected to a Communications Coupler Unit: Possible in 6 orientations. Restrictions: The cold junction compensation error is restricted according to the installation orientation and the power consumption of adjacent Units. Refer to *Cold Junction Compensation Error Specifications for Units That Take a Thermocouple Input Type*.		
Terminal connection diagram	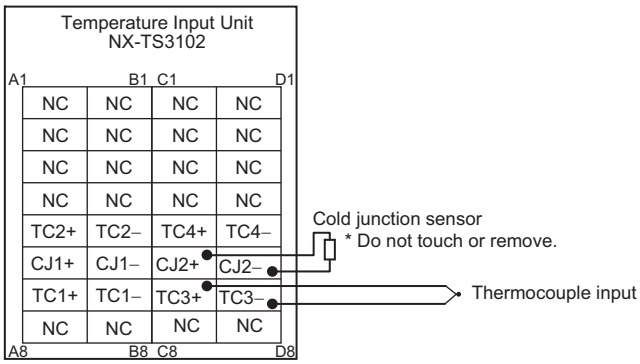 		

*1. Refer to *Reference Accuracy and Temperature Coefficient According to the Input Type and Measurement Temperature*.
*2. The overall accuracy is guaranteed for a set consisting of a cold junction sensor that is mounted on the terminal block and a Temperature Input Unit. Be sure to use the terminal block and the Temperature Input Unit together. A calibration control number is both displayed on the terminal block and the Unit. Make sure to return the terminal block (including a cold junction sensor mounted) and the Unit together for repair.
*3. Refer to *Cold Junction Compensation Error Specifications for Units That Take a Thermocouple Input Type* for the specifications for each set of operating conditions.

Temperature Input Unit (Thermocouple Input type) 4 points NX-TS3104

Unit name	Temperature Input Unit (thermocouple input type)	**Model**	NX-TS3104
Number of points	4 points	**External connection terminals**	Screwless clamping terminal block (16 terminals x 2)
I/O refreshing method	Free-Run refreshing		
Indicators	TS indicator 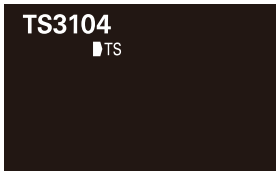 	**Temperature sensor**	K, J, T, E, L, U, N, R, S, WRe5-26, PLII
		Input conversion range	±20°C of the input range
		Absolute maximum rating	±130 mV
		Input impedance	20 kΩ min.
		Resolution	0.001°C max.
		Reference accuracy	*1
		Temperature coefficient	*1
		Cold junction compensation error	±1.2°C *2 *3
		Input disconnection detection current	Approx. 0.1 μA
Warm-up period	45 minutes	**Conversion time**	60 ms/Unit
Dimensions	24 (W) x 100 (H) x 71 (D)	**Isolation method**	Between the input and the NX bus: Power = Transformer, Signal = Digital isolator Between inputs: Power = Transformer, Signal = Digital isolator
Insulation resistance	20 MΩ min. between isolated circuits (at 100 VDC)	**Dielectric strength**	510 VAC between isolated circuits for 1 minute at a leakage current of 5 mA max.
I/O power supply method	No supply	**Current capacity of I/O power supply terminal**	Without I/O power supply terminals
NX Unit power consumption	• Connected to a CPU Unit or Communication Control Unit 1.45 W max. • Connected to a Communications Coupler Unit 1.10 W max.	**Current consumption from I/O power supply**	No consumption
Weight	140 g max.		
Installation orientation and restrictions	Installation orientation: • Connected to a CPU Unit or Communication Control Unit: Possible in upright installation. • Connected to a Communications Coupler Unit: Possible in 6 orientations. Restrictions: The cold junction compensation error is restricted according to the installation orientation and the power consumption of adjacent Units. Refer to *Cold Junction Compensation Error Specifications for Units That Take a Thermocouple Input Type*.		
Terminal connection diagram	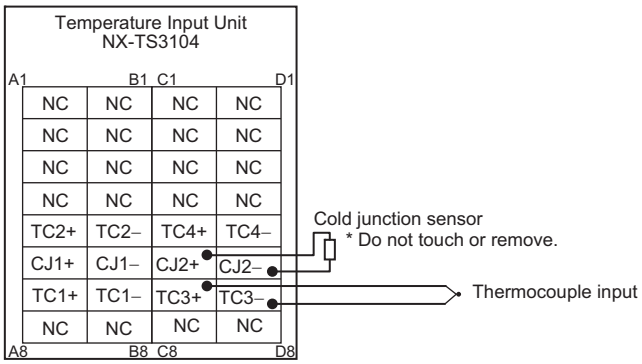 		

*1. Refer to *Reference Accuracy and Temperature Coefficient According to the Input Type and Measurement Temperature*.
*2. The overall accuracy is guaranteed for a set consisting of a cold junction sensor that is mounted on the terminal block and a Temperature Input Unit. Be sure to use the terminal block and the Temperature Input Unit together. A calibration control number is both displayed on the terminal block and the Unit. Make sure to return the terminal block (including a cold junction sensor mounted) and the Unit together for repair.
*3. Refer to *Cold Junction Compensation Error Specifications for Units That Take a Thermocouple Input Type* for the specifications for each set of operating conditions.

Temperature Input Unit (Resistance Thermometer Input type) 4 points NX-TS3201

Unit name	Temperature Input Unit (resistance thermometer input type)	**Model**	NX-TS3201
Number of points	4 points	**External connection terminals**	Screwless clamping terminal block (16 Terminals x 2)
I/O refreshing method	Free-Run refreshing		
Indicator	TS indicator 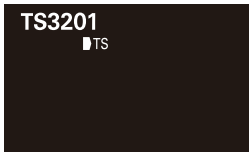 	**Temperature sensor**	Pt100 (three-wire)/Pt1000 (three-wire)
		Input conversion range	±20°C of the input range
		Input detection current	Approx. 0.25 mA
		Resolution	0.1°C max.
		Reference accuracy	*
		Temperature coefficient	*
		Effect of conductor resistance	0.06°C/Ω max. (also 20 Ω max.)
Warm-up period	10 minutes	**Conversion time**	250 ms/Unit
Dimensions	24 (W) x 100 (H) x 71 (D)	**Isolation method**	Between the input and the NX bus: Power = Transformer, Signal = Photocoupler Between inputs: Power = Transformer, Signal = Photocoupler
Insulation resistance	20 MΩ min. between isolated circuits (at 100 VDC)	**Dielectric strength**	510 VAC between isolated circuits for 1 minute at a leakage current of 5 mA max.
I/O power supply method	No supply	**Current capacity of I/O power supply terminal**	Without I/O power supply terminals
NX Unit power consumption	• Connected to a CPU Unit or Communication Control Unit 1.75 W max. • Connected to a Communications Coupler Unit 1.30 W max.	**Current consumption from I/O power supply**	No consumption
Weight	140 g max.		
Installation orientation and restrictions	Installation orientation: • Connected to a CPU Unit or Communication Control Unit: Possible in upright installation. • Connected to a Communications Coupler Unit: Possible in 6 orientations. Restrictions: No restrictions		
Terminal connection diagram	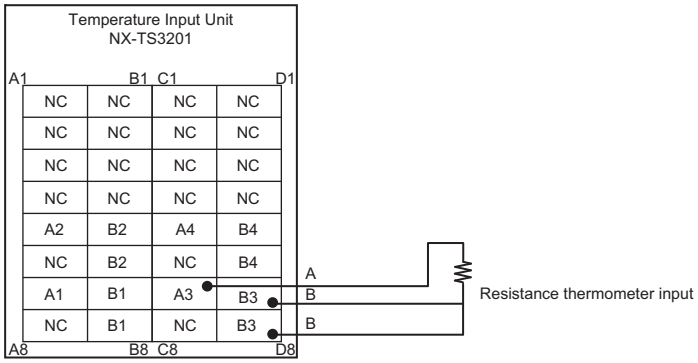 		

* Refer to *Reference Accuracy and Temperature Coefficient According to the Input Type and Measurement Temperature*.

Temperature Input Unit (Resistance Thermometer Input type) 4 points NX-TS3202

Unit name	Temperature Input Unit (resistance thermometer input type)	**Model**	NX-TS3202
Number of points	4 points	**External connection terminals**	Screwless clamping terminal block (16 terminals x 2)
I/O refreshing method	Free-Run refreshing		
Indicator	TS indicator 	**Temperature sensor**	Pt100 (three-wire)
		Input conversion range	±20°C of the input range
		Input detection current	Approx. 0.25 mA
		Resolution	0.01°C max.
		Reference accuracy	*
		Temperature coefficient	*
		Effect of conductor resistance	0.06°C/Ω max. (also 20 Ω max.)
Warm-up period	30 minutes	**Conversion time**	10 ms/Unit
Dimensions	24 (W) x 100 (H) x 71 (D)	**Isolation method**	Between the input and the NX bus: Power = Transformer, Signal = Digital isolator Between inputs: Power = Transformer, Signal = Digital isolator
Insulation resistance	20 MΩ min. between isolated circuits (at 100 VDC)	**Dielectric strength**	510 VAC between isolated circuits for 1 minute at a leakage current of 5 mA max.
I/O power supply method	No supply	**Current capacity of I/O power supply terminal**	Without I/O power supply terminals
NX Unit power consumption	• Connected to a CPU Unit or Communication Control Unit 1.50 W max. • Connected to a Communications Coupler Unit 1.05 W max.	**Current consumption from I/O power supply**	No consumption
Weight	130 g max.		
Installation orientation and restrictions	Installation orientation: • Connected to a CPU Unit or Communication Control Unit: Possible in upright installation. • Connected to a Communications Coupler Unit: Possible in 6 orientations. Restrictions: No restrictions		
Terminal connection diagram	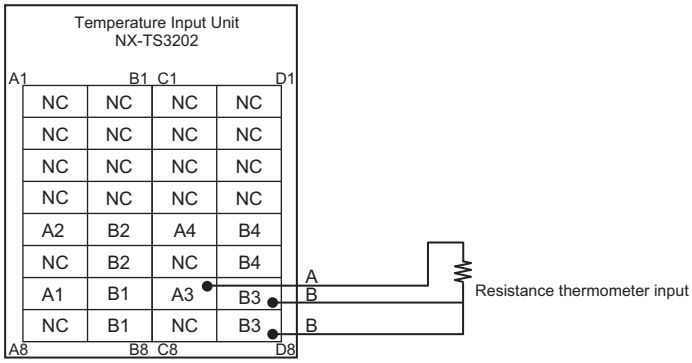 		

* Refer to *Reference Accuracy and Temperature Coefficient According to the Input Type and Measurement Temperature*.

Temperature Input Unit (Resistance Thermometer Input type) 4 points NX-TS3204

Unit name	Temperature Input Unit (resistance thermometer input type)	**Model**	NX-TS3204
Number of points	4 points	**External connection terminals**	Screwless clamping terminal block (16 terminals x 2)
I/O refreshing method	Free-Run refreshing		
Indicator	TS indicator 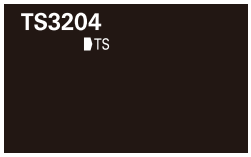 	**Temperature sensor**	Pt100 (three-wire)/Pt1000 (three-wire)
		Input conversion range	±20°C of the input range
		Input detection current	Approx. 0.25 mA
		Resolution	0.001°C max.
		Reference accuracy	*
		Temperature coefficient	*
		Effect of conductor resistance	0.06°C/Ω max. (also 20 Ω max.)
Warm-up period	30 minutes	**Conversion time**	60 ms/Unit
Dimensions	24 (W) x 100 (H) x 71 (D)	**Isolation method**	Between the input and the NX bus: Power = Transformer, Signal = Digital isolator Between inputs: Power = Transformer, Signal = Digital isolator
Insulation resistance	20 MΩ min. between isolated circuits (at 100 VDC)	**Dielectric strength**	510 VAC between isolated circuits for 1 minute at a leakage current of 5 mA max.
I/O power supply method	No supply	**Current capacity of I/O power supply terminal**	Without I/O power supply terminals
NX Unit power consumption	• Connected to a CPU Unit or Communication Control Unit 1.45 W max. • Connected to a Communications Coupler Unit 1.05 W max.	**Current consumption from I/O power supply**	No consumption
Weight	130 g max.		
Installation orientation and restrictions	Installation orientation: • Connected to a CPU Unit or Communication Control Unit: Possible in upright installation. • Connected to a Communications Coupler Unit: Possible in 6 orientations. Restrictions: No restrictions		
Terminal connection diagram	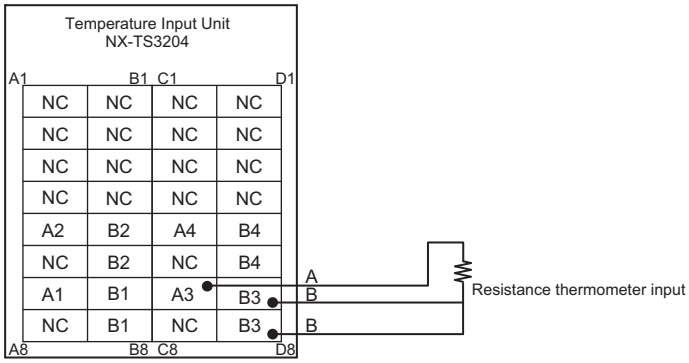 		

* Refer to *Reference Accuracy and Temperature Coefficient According to the Input Type and Measurement Temperature*.

• Reference accuracy and temperature coefficient according to the input type and measurement temperature *1

For NX-TS□□02/TS□□04

Conversion time	Input type		Measurement temperature (°C)	Reference accuracy °C (%) *3	Temperature coefficient °C/°C *4 (ppm/°C *5)
	Input type *2	Temperature range (°C)			
10/60ms	K	-200 to 1300	Same as the left	±0.75 (±0.05%)	±0.08 (±50 ppm/°C)
	K	-20 to 600 (High Resolution)	Same as the left	±0.30 (±0.05%)	±0.03 (±48 ppm/°C)
	J	-200 to 1200	-200 to 0	±0.70 (±0.05%)	±0.13 (±96 ppm/°C)
			0 to 1200		±0.06 (±42 ppm/°C)
	J	-20 to 600 (High Resolution)	Same as the left	±0.30 (±0.05%)	±0.04 (±72 ppm/°C)
	T	-200 to 400	-200 to -180	±1.30 (±0.22%)	±0.05 (±75 ppm/°C)
			-180 to 0	±0.70 (±0.12%)	
			0 to 400	±0.33 (±0.055%)	
	E	-200 to 1000	-200 to 0	±0.60 (±0.05%)	±0.12 (±100 ppm/°C)
			0 to 1000		±0.06 (±50 ppm/°C)
	L	-200 to 900	Same as the left	±0.50 (±0.05%)	±0.04 (±40 ppm/°C)
	U	-200 to 600	-200 to -100	±0.70 (±0.09%)	±0.06 (±75 ppm/°C)
			-100 to 0	±0.50 (±0.07%)	
			0 to 600	±0.40 (±0.05%)	
	N	-200 to 1300	-200 to -150	±1.60 (±0.11%)	±0.11 (±70 ppm/°C)
			-150 to -100	±0.75 (±0.05%)	
			-100 to 1300		±0.08 (±50 ppm/°C)
	R	-50 to 1700	-50 to 0	±3.20 (±0.19%)	±0.13 (±77 ppm/°C)
			0 to 100	±2.50 (±0.15%)	±0.11 (±60 ppm/°C)
			100 to 1700	±1.75 (±0.10%)	
	S	-50 to 1700	-50 to 0	±3.20 (±0.19%)	±0.13 (±77 ppm/°C)
			0 to 100	±2.50 (±0.15%)	±0.11 (±60 ppm/°C)
			100 to 1700	±1.75 (±0.10%)	
	WRe5-26	0 to 2300	0 to 1500	±1.15 (±0.05%)	±0.13 (±58 ppm/°C)
			1500 to 2200		±0.21 (±91 ppm/°C)
			2200 to 2300	±1.40 (±0.07%)	
	PL II	0 to 1300	Same as the left	±0.65 (±0.05%)	±0.07 (±57 ppm/°C)
	Pt100	-200 to 850	-200 to -50	±0.50 (±0.05%)	±0.08 (±78 ppm/°C)
			-50 to 150	±0.21 (±0.02%)	±0.03 (±29 ppm/°C)
			150 to 850	±0.50 (±0.05%)	±0.08 (±78 ppm/°C)
	Pt1000	-200 to 850	Same as the left	±0.50 (±0.05%)	±0.09 (±85 ppm/°C)

For NX-TS□□01

Conversion time	Input type		Measurement temperature (°C)	Reference accuracy °C (%) *3	Temperature coefficient °C/°C *4 (ppm/°C *5)
	Input type	Temperature range (°C)			
250 ms	K	-200 to 1300	-200 to -100	±1.5 (±0.1%)	±0.15 (±100 ppm/°C)
			-100 to 400		±0.30 (±200 ppm/°C)
			400 to 1300		±0.38 (±250 ppm/°C)
	J	-200 to 1200	-200 to 400	±1.4 (±0.1%)	±0.14 (±100 ppm/°C)
			400 to 900	±1.2 (±0.09%)	±0.28 (±200 ppm/°C)
			900 to 1200		±0.35 (±250 ppm/°C)
	T	-200 to 400	-200 to -100	±1.2 (±0.2%)	±0.30 (±500 ppm/°C)
			-100 to 400		±0.12 (±200 ppm/°C)
	E	-200 to 1000	-200 to 400	±1.2 (±0.1%)	±0.12 (±100 ppm/°C)
			400 to 700	±2.0 (±0.17%)	±0.24 (±200 ppm/°C)
			700 to 1000		±0.30 (±250 ppm/°C)
	L	-200 to 900	-200 to 300	±1.1 (±0.1%)	±0.11 (±100 ppm/°C)
			300 to 700	±2.2 (±0.2%)	±0.22 (±200 ppm/°C)
			700 to 900		±0.28 (±250 ppm/°C)
	U	-200 to 600	-200 to 400	±1.2 (±0.15%)	±0.12 (±150 ppm/°C)
			400 to 600	±1.0 (±0.13%)	
	N	-200 to 1300	-200 to 400	±1.5 (±0.1%)	±0.30 (±200 ppm/°C)
			400 to 1000		
			1000 to 1300		±0.38 (±250 ppm/°C)
	R	-50 to 1700	-50 to 500	±1.75 (±0.1%)	±0.44 (±250 ppm/°C)
			500 to 1200	±2.5 (±0.15%)	
			1200 to 1700		
	S	-50 to 1700	-50 to 600	±1.75 (±0.1%)	±0.44 (±250 ppm/°C)
			600 to 1100	±2.5 (±0.15%)	
			1100 to 1700		
	B	0 to 1800	0.0 to 400.0	Reference accuracy does not apply	Reference accuracy does not apply
			400 to 1200	±3.6 (±0.2%)	±0.45 (±250 ppm/°C)
			1200 to 1800	±5.0 (±0.28%)	±0.54 (±300 ppm/°C)
	WRe5-26	0 to 2300	0 to 300	±1.15 (±0.05%)	±0.46 (±200 ppm/°C)
			300 to 800	±2.3 (±0.1%)	
			800 to 1500	±3.0 (±0.13%)	
			1500 to 2300		±0.691 (±300 ppm/°C)
	PLII	0 to 1300	0 to 400	±1.3 (±0.1%)	±0.23 (±200 ppm/°C)
			400 to 800	±2.0 (±0.15%)	±0.39 (±300 ppm/°C)
			800 to 1300		±0.65 (±500 ppm/°C)
	Pt100	-200 to 850	-200 to 300	±1.0 (±0.1%)	±0.1 (±100 ppm/°C)
			300 to 700	±2.0 (±0.2%)	±0.2 (±200 ppm/°C)
			700 to 850	±2.5 (±0.25%)	±0.25 (±250 ppm/°C)
	Pt1000	-200 to 850	-200 to 300	±1.0 (±0.1%)	±0.1 (±100 ppm/°C)
			300 to 700	±2.0 (±0.2%)	±0.2 (±200 ppm/°C)
			700 to 850	±2.5 (±0.25%)	±0.25 (±250 ppm/°C)

*1. To convert the temperature unit from Celsius to Fahrenheit, use the following equation.
Fahrenheit temperature (°F) = Celsius temperature (°C) x 1.8 + 32
*2. If there is more than one input range for the same input type, the one with narrower input range has higher resolution.
*3. For a thermocouple input type Temperature Input Unit, the overall accuracy is guaranteed for a set consisting of a cold junction sensor that is mounted on the terminal block and a Temperature Input Unit. Be sure to use the terminal block and Temperature Input Unit with the same calibration control number together. For the 24 mm wide model, also be sure the left and right terminal blocks are correctly attached.

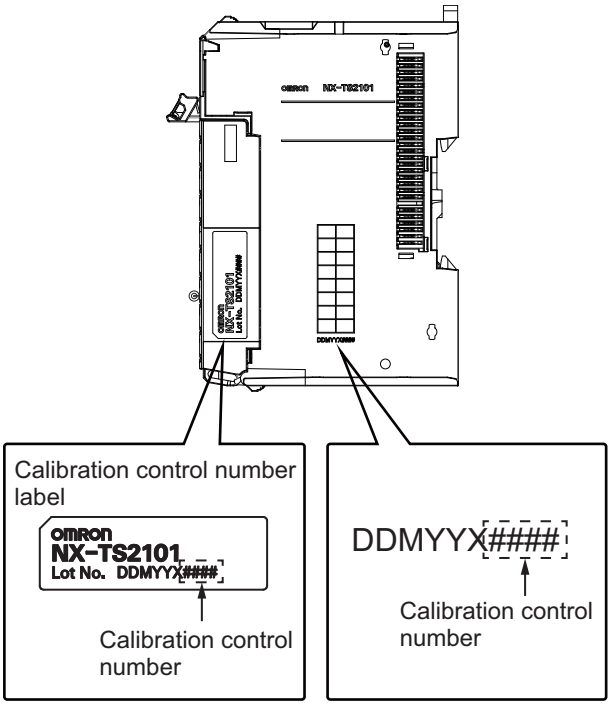

*4. An error for a measured value when the ambient temperature changes by 1°C.
The following formula is used to calculate the error of the measured value.
Overall accuracy = Reference accuracy + Temperature characteristic x Change in the ambient temperature + Cold junction compensation error
(Calculation example)
Conditions

Item	Description
Ambient temperature	30°C
Measured value	100°C
NX Unit	NX-TS2101
Thermocouple	K thermocouple

The characteristic values are formulated from the data sheet or reference accuracy and temperature coefficient table under the above conditions

Item	Description
Reference accuracy	-100 to 400°C: ±1.5°C
Temperature coefficient	-100 to 400°C: ±0.30°C/°C
Change in the ambient temperature	25°C -> 30°C 5 deg
Cold junction compensation error	±1.2°C

Therefore,
Overall accuracy = Reference accuracy + Temperature characteristic x Change in the ambient temperature + Cold junction compensation error
= ±1.5°C + (±0.30°C/°C) x 5 deg + ±1.2°C
= ±4.2°C

*5. The ppm value is for the full scale of temperature range.

• Cold Junction Compensation Error Specifications for Units That Take a Thermocouple Input Type

The cold junction compensation error for Units that take a thermocouple input type is restricted as follows according to the installation orientation and the power consumption of adjacent Units *.

(a) For upright installation, when the power consumption is 1.5 W or less for both the left and right adjacent Units

The cold junction compensation error is ±1.2°C.
However, there are exceptions depending on the input type and temperature. Those conditions and the cold junction compensation error are as in the table below.

Input type and temperature range	Cold junction compensation error
T below -90°C	±3.0°C
J, E, K and N below -100°C	
U, L and PLII	
R and S below 200°C	
B below 400°C	Not guaranteed
W	±3.0°C

(b) When the power consumption of either the left or the right adjacent Unit is more than 1.5 W but less than 3.9 W. Or for any installation other than upright, when the power consumption of both the left and right adjacent Units is less than 3.9 W

The cold junction compensation error is ±4.0°C.
However, there are exceptions depending on the input type and temperature. Those conditions and the cold junction compensation error are as in the table below.

Input type and temperature range	Cold junction compensation error
T below -90°C	±7.0°C
J, E, K and N below -100°C	
U, L and PLII	
R and S below 200°C	
B below 400°C	Not guaranteed
W	±9.0°C

(c) When the power consumption exceeds 3.9 W for either the left or right adjacent Unit

Do not use the above condition (c) because the cold junction compensation error is not guaranteed in this condition.

* The power consumption of adjacent Units is the total of the following values.
The power consumption of the NX Unit power supply and I/O power supply for the NX Units adjacent to the Temperature Input Unit. If the adjacent Unit is an Input Unit, it is the total power consumption according to the input current.

NX-series Heater Burnout Detection Unit

NX-HB

Temperature control with heater burnout detection in conjunction with a temperature input unit and PID instructions

- Reduce the costs for communications programming and other development
- Achieve flexible temperature control

NX-HB3101

Features

- Up to four CT inputs per unit
- Omron's proven heater burnout detection function
- Monitoring of CT currents to detect heater burnouts and SSR failures
- Time-proportional control outputs to drive SSRs
- Control outputs not affected by controller cycle time
- Four control outputs to drive SSRs (100 mA max.)
- Heater burnout detection for a single-phase or three-phase heater
- Detachable front connector with screwless Push-In Plus terminals for easy installation and maintenance

System Configurations

Connected to a CPU Unit

The system configuration that you use to connect a Heater Burnout Detection Unit and Temperature Input Unit to an NX-series NX1P2 CPU Unit is shown in the following figure.

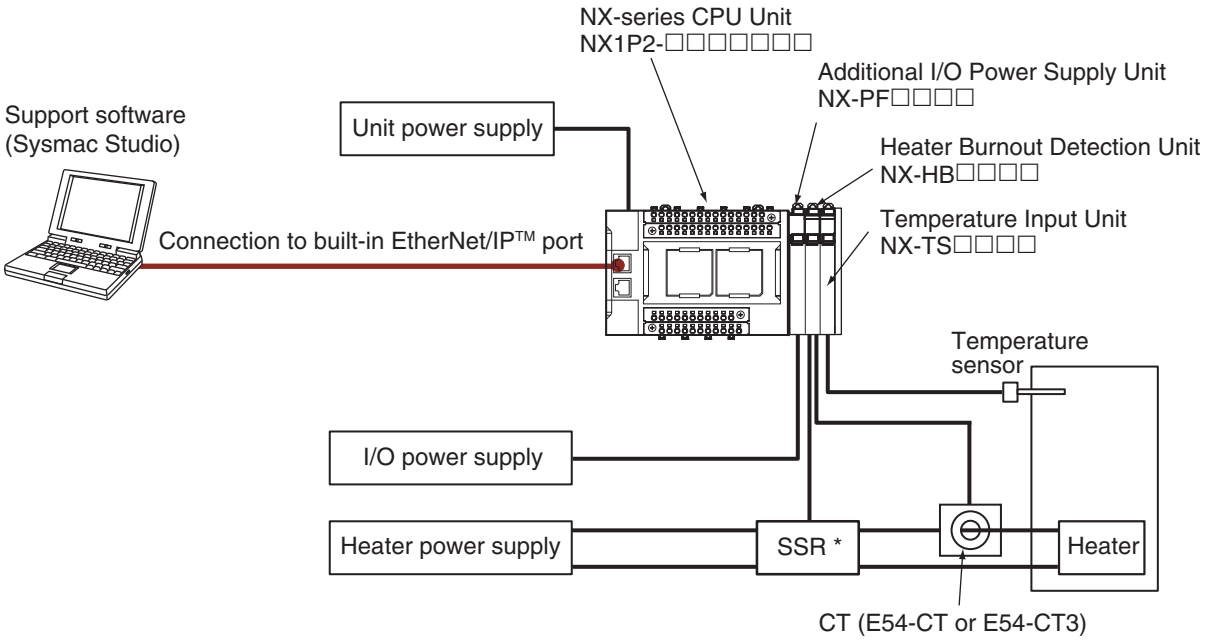

* The SSR is used to turn the heater ON and OFF.

Connected to an EtherCAT Coupler Unit

The system configuration that you use to connect a Heater Burnout Detection Unit and Temperature Input Unit to an EtherCAT Coupler Unit and combine these with an NJ/NX/NY-series Controller is shown in the following figure.

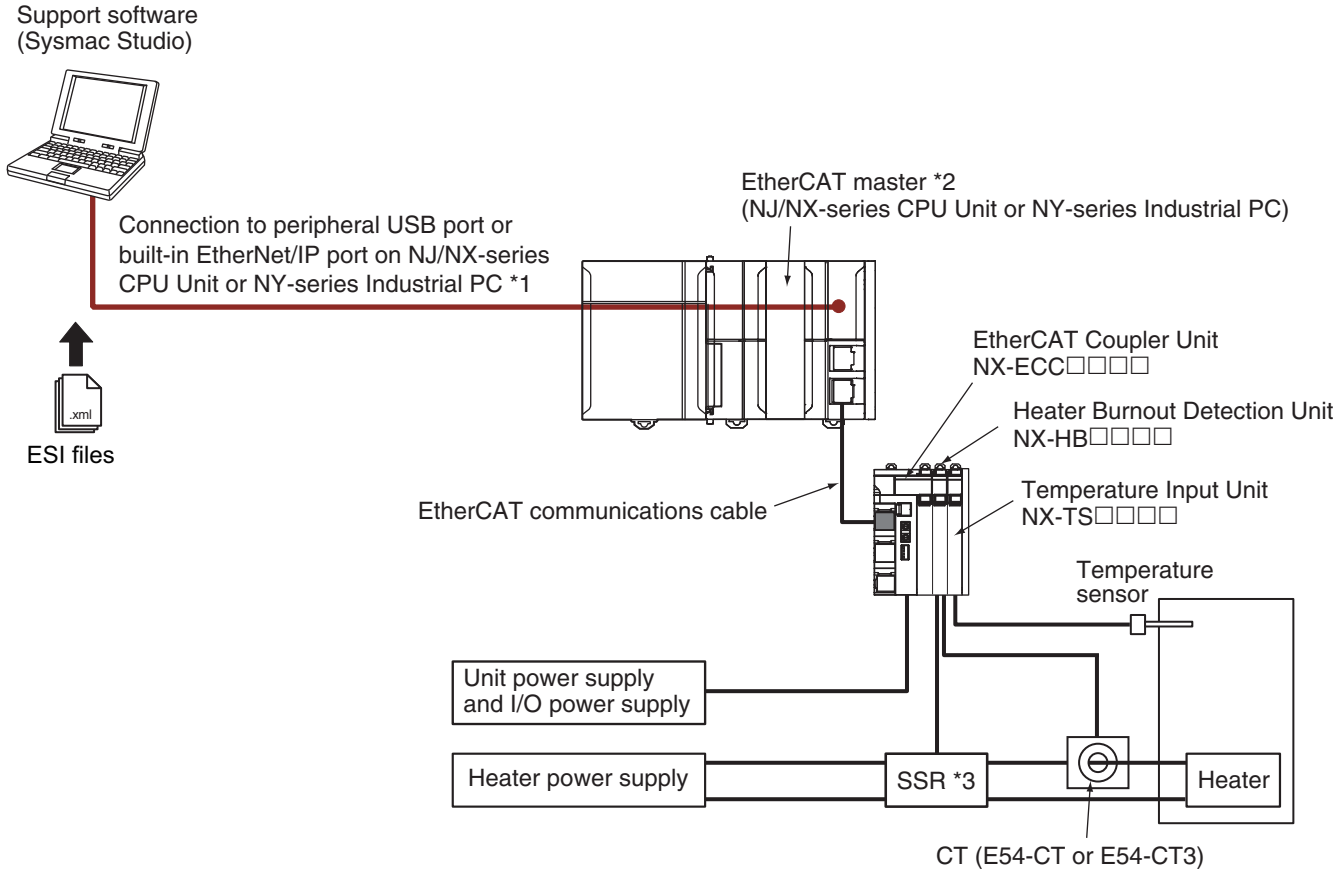

*1. The connection method for the Sysmac Studio depends on the model of the CPU Unit or Industrial PC.
*2. An EtherCAT Slave Terminal cannot be connected to any of the OMRON CJ1W-NC□81/□82 Position Control Units even though they can operate as EtherCAT masters.
*3. The SSR is used to turn the heater ON and OFF.

Note: To check whether NX Units can be connected to your CPU Unit or Communications Coupler Unit, refer to the user's manual for the CPU Unit or Communications Coupler Unit.

Function Specifications

Function	Description
Free-Run Refreshing	With this I/O refreshing method, the refresh cycle of the NX bus and I/O refresh cycles of the NX Units are asynchronous.
CT Allocation	This function is used to assign each CT input to a corresponding control output.
Reading CT Currents	This function reads CT inputs as heater currents or leakage currents.
Heater Burnout Detection	This function detects heater burnouts. A heater burnout is detected if the control output is ON and the heater current is equal to or less than the heater burnout detection current.
SSR Failure Detection	This function detects SSR failures. An SSR failure is detected if the control output is OFF and the leakage current is equal to or greater than the detection current. An SSR failure is a failure that is caused by an SSR short-circuit.
Time-proportional Output	This function controls a control output by using the manipulated variable from the host controller as a duty ratio. You can also specify the minimum pulse widths and execute immediate output commands.
Load Rejection Output Setting	This function performs a preset output operation when the Heater Burnout Detection Unit cannot receive an output set value due to a communications error between the host and the Communications Coupler Unit or due to an error on the NX bus.
Load Short-circuit Protection	This function is used to protect the output circuits of the Heater Burnout Detection Unit when an external device short-circuits. This function is supported only by the NX-HB3201.

Heater Burnout Detection Unit

Heater Burnout Detection Unit (NPN) NX-HB3101

Unit name	Heater Burnout Detection Unit		**Model**	NX-HB3101	
Number of points	4 CT inputs and 4 control outputs		**External connection terminals**	Screwless Clamping Terminal Block (16 terminals)	
I/O refreshing method	Free-Run refreshing				
Indicators	TS indicator and output indicators 				
CT input section	**CT current input range**	0 to 0.125 A	**Control output section**	**Internal I/O common**	NPN
	Input resistance	Approx. 2.7 Ω		**Control period**	50 to 100,000 ms
	Connectable CTs	E54-CT1 and E54-CT3		**Manipulated variable**	0% to 100%
				Resolution	1 ms
				Rated voltage	12 to 24 V DC
	Maximum heater current	50 A AC		**Operating load voltage range**	10.2 to 28.8 VDC
	Resolution	0.1 A		**Maximum load current**	0.1 A/point, 0.4 A/Unit
	Overall accuracy (25°C)	±5% (full scale) ±1 digit		**Maximum inrush current**	1.0 A/point max., 10 ms
				Leakage current	0.1 mA max.
	Influence of temperature (0 to 55°C)	±2% (full scale) ±1 digit		**Residual voltage**	1.5 V max.
				Disconnection/ short-circuit detection	None
	Conversion time	10 ms		**Protective functions**	None
Dimensions (mm)	12 × 100 × 71 mm (W×H×D)		**Isolation method**	Between control outputs and Internal circuits: Photocoupler isolation No isolation between Internal circuits and CT inputs	
Insulation resistance	20 MΩ min. between isolated circuits (at 100 VDC)		**Dielectric strength**	510 VAC between isolated circuits for 1 minute with a leakage current of 5 mA max.	
I/O power supply method	Supplied from the NX bus.		**Current capacity of I/O power supply terminals**	IOV: 0.1 A max. per terminal	
NX Unit power consumption	• Connected to a CPU Unit 1.05 W max. • Connected to a Communications Coupler Unit 0.75 W max.		**Current consumption from I/O power supply**	20 mA max.	
Weight	70 g max.				

Circuit configuration	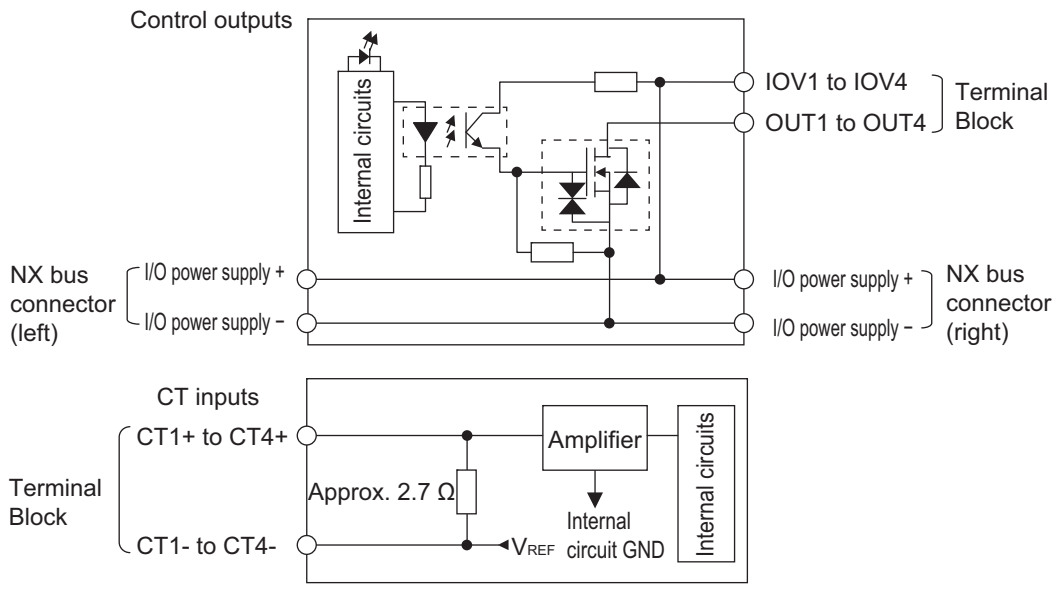
Installation method and restrictions	Installation orientation: • Connected to a CPU Unit: Possible in upright installation. • Connected to a Communications Coupler Unit: Possible in 6 orientations. Restrictions: No restrictions
Terminal connection diagram	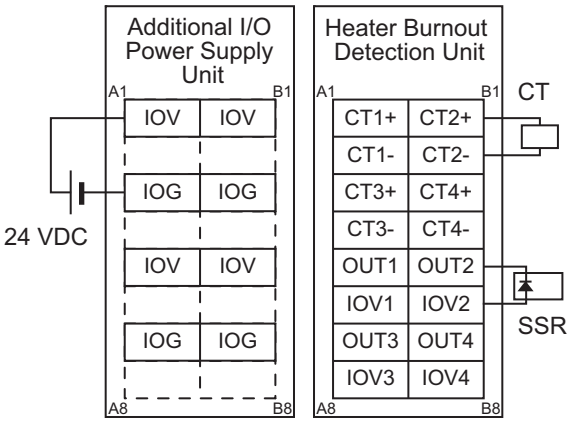

Heater Burnout Detection Unit (PNP) NX-HB3201

Unit name	Heater Burnout Detection Unit		**Model**	NX-HB3201	
Number of points	4 CT inputs and 4 control outputs		**External connection terminals**	Screwless Clamping Terminal Block (16 terminals)	
I/O refreshing method	Free-Run refreshing				
Indicators	TS indicator and output indicators 				
CT input section	**CT current input range**	0 to 0.125 A	**Control output section**	**Internal I/O common**	PNP
	Input resistance	Approx. 2.7 Ω		**Control period**	50 to 100,000 ms
	Connectable CTs	E54-CT1 and E54-CT3		**Manipulated variable**	0% to 100%
				Resolution	1 ms
				Rated voltage	24 VDC
	Maximum heater current	50 A AC		**Operating load voltage range**	15 to 28.8 VDC
	Resolution	0.1 A		**Maximum load current**	0.1 A/point, 0.4 A/Unit
	Overall accuracy (25°C)	±5% (full scale) ±1 digit		**Maximum inrush current**	1.0 A/point max., 10 ms
				Leakage current	0.1 mA max.
	Influence of temperature (0 to 55°C)	±2% (full scale) ±1 digit		**Residual voltage**	1.5 V max.
				Disconnection/ short-circuit detection	None
	Conversion time	10 ms		**Protective functions**	Provided.
Dimensions (mm)	12 × 100 × 71 mm (W×H×D)		**Isolation method**	Between control outputs and Internal circuits: Photocoupler isolation No isolation between Internal circuits and CT inputs	
Insulation resistance	20 MΩ min. between isolated circuits (at 100 VDC)		**Dielectric strength**	510 VAC between isolated circuits for 1 minute with a leakage current of 5 mA max.	
I/O power supply method	Supplied from the NX bus.		**Current capacity of I/O power supply terminals**	IOV: 0.1 A max. per terminal	
NX Unit power consumption	• Connected to a CPU Unit 1.05 W max. • Connected to a Communications Coupler Unit 0.75 W max.		**Current consumption from I/O power supply**	20 mA max.	
Weight	70 g max.				

Circuit configuration	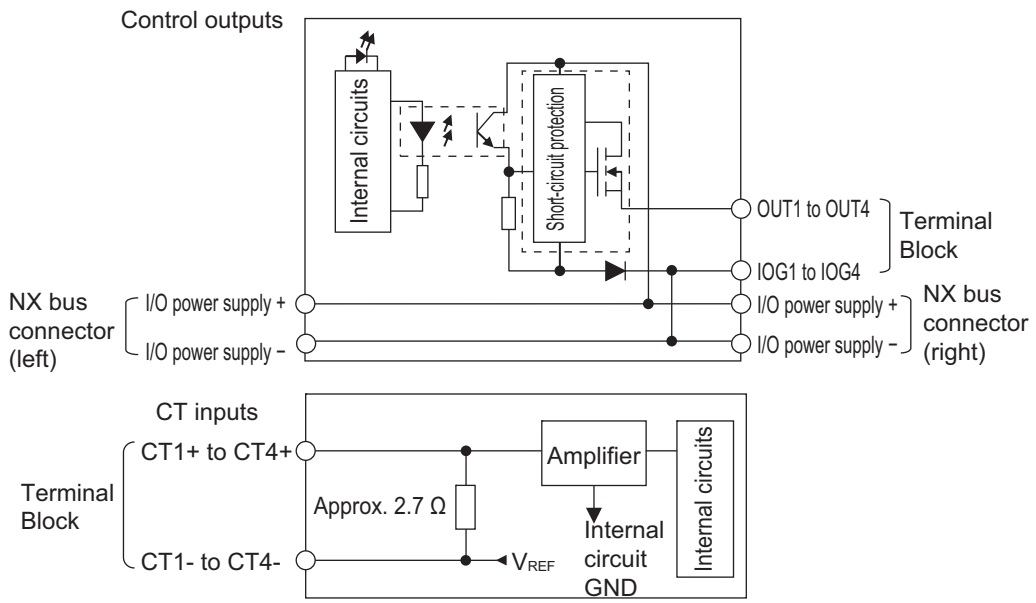
Installation method and restrictions	Installation orientation: • Connected to a CPU Unit: Possible in upright installation. • Connected to a Communications Coupler Unit: Possible in 6 orientations. Restrictions: No restrictions
Terminal connection diagram	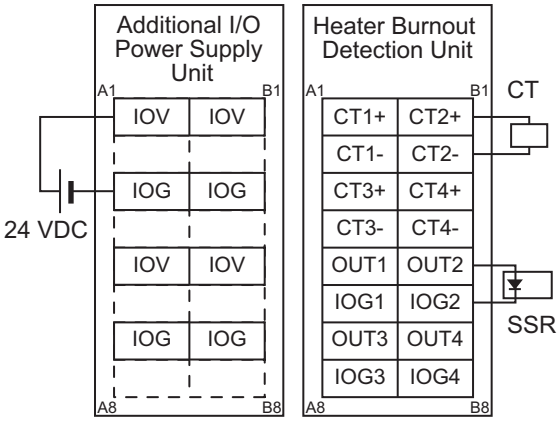

Terms and Conditions Agreement

Read and understand this catalog.
Please read and understand this catalog before purchasing the products. Please consult your OMRON representative if you have any questions or comments.

Warranties.
(a) Exclusive Warranty. Omron's exclusive warranty is that the Products will be free from defects in materials and workmanship for a period of twelve months from the date of sale by Omron (or such other period expressed in writing by Omron). Omron disclaims all other warranties, express or implied.
(b) Limitations. OMRON MAKES NO WARRANTY OR REPRESENTATION, EXPRESS OR IMPLIED, ABOUT NON-INFRINGEMENT, MERCHANTABILITY OR FITNESS FOR A PARTICULAR PURPOSE OF THE PRODUCTS. BUYER ACKNOWLEDGES THAT IT ALONE HAS DETERMINED THAT THE
PRODUCTS WILL SUITABLY MEET THE REQUIREMENTS OF THEIR INTENDED USE.
Omron further disclaims all warranties and responsibility of any type for claims or expenses based on infringement by the Products or otherwise of any intellectual property right. (c) Buyer Remedy. Omron's sole obligation hereunder shall be, at Omron's election, to (i) replace (in the form originally shipped with Buyer responsible for labor charges for removal or replacement thereof) the non-complying Product, (ii) repair the non-complying Product, or (iii) repay or credit Buyer an amount equal to the purchase price of the non-complying Product; provided that in no event shall Omron be responsible for warranty, repair, indemnity or any other claims or expenses regarding the Products unless Omron's analysis confirms that the Products were properly handled, stored, installed and maintained and not subject to contamination, abuse, misuse or inappropriate modification. Return of any Products by Buyer must be approved in writing by Omron before shipment. Omron Companies shall not be liable for the suitability or unsuitability or the results from the use of Products in combination with any electrical or electronic components, circuits, system assemblies or any other materials or substances or environments. Any advice, recommendations or information given orally or in writing, are not to be construed as an amendment or addition to the above warranty.
See http://www.omron.com/global/ or contact your Omron representative for published information.

Limitation on Liability; Etc.
OMRON COMPANIES SHALL NOT BE LIABLE FOR SPECIAL, INDIRECT, INCIDENTAL, OR CONSEQUENTIAL DAMAGES, LOSS OF PROFITS OR PRODUCTION OR COMMERCIAL LOSS IN ANY WAY CONNECTED WITH THE PRODUCTS, WHETHER SUCH CLAIM IS BASED IN CONTRACT, WARRANTY, NEGLIGENCE OR STRICT LIABILITY.
Further, in no event shall liability of Omron Companies exceed the individual price of the Product on which liability is asserted.

Suitability of Use.
Omron Companies shall not be responsible for conformity with any standards, codes or regulations which apply to the combination of the Product in the Buyer's application or use of the Product. At Buyer's request, Omron will provide applicable third party certification documents identifying ratings and limitations of use which apply to the Product. This information by itself is not sufficient for a complete determination of the suitability of the Product in combination with the end product, machine, system, or other application or use. Buyer shall be solely responsible for determining appropriateness of the particular Product with respect to Buyer's application, product or system. Buyer shall take application responsibility in all cases.
NEVER USE THE PRODUCT FOR AN APPLICATION INVOLVING SERIOUS RISK TO LIFE OR PROPERTY OR IN LARGE QUANTITIES WITHOUT ENSURING THAT THE SYSTEM AS A WHOLE HAS BEEN DESIGNED TO ADDRESS THE RISKS, AND THAT THE OMRON PRODUCT(S) IS PROPERLY RATED AND INSTALLED FOR THE INTENDED USE WITHIN THE OVERALL EQUIPMENT OR SYSTEM.

Programmable Products.
Omron Companies shall not be responsible for the user's programming of a programmable Product, or any consequence thereof.

Performance Data.
Data presented in Omron Company websites, catalogs and other materials is provided as a guide for the user in determining suitability and does not constitute a warranty. It may represent the result of Omron's test conditions, and the user must correlate it to actual application requirements. Actual performance is subject to the Omron's Warranty and Limitations of Liability.

Change in Specifications.
Product specifications and accessories may be changed at any time based on improvements and other reasons. It is our practice to change part numbers when published ratings or features are changed, or when significant construction changes are made. However, some specifications of the Product may be changed without any notice. When in doubt, special part numbers may be assigned to fix or establish key specifications for your application. Please consult with your Omron's representative at any time to confirm actual specifications of purchased Product.

Errors and Omissions.
Information presented by Omron Companies has been checked and is believed to be accurate; however, no responsibility is assumed for clerical, typographical or proofreading errors or omissions.

2019.5

In the interest of product improvement, specifications are subject to change without notice.

OMRON Corporation
Industrial Automation Company

http://www.ia.omron.com/

(c)Copyright OMRON Corporation 2019 All Right Reserved.